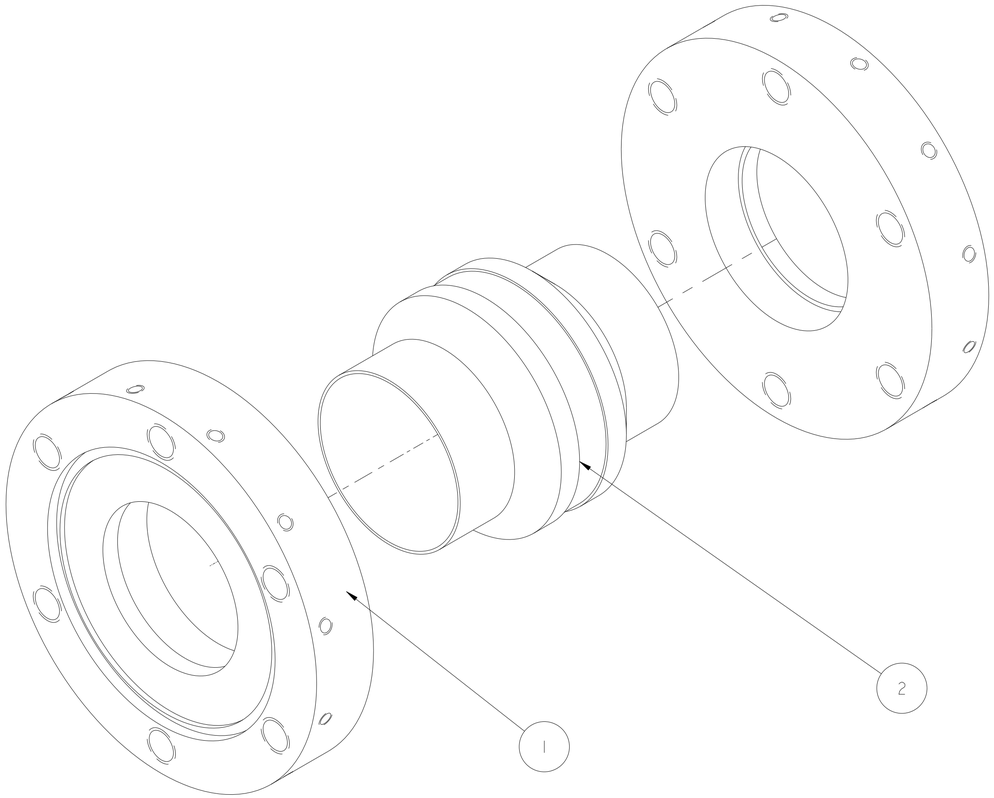

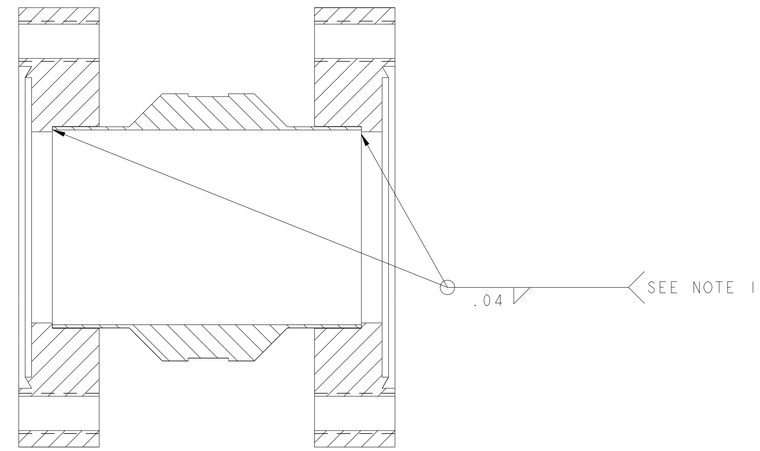

SECTION A - A

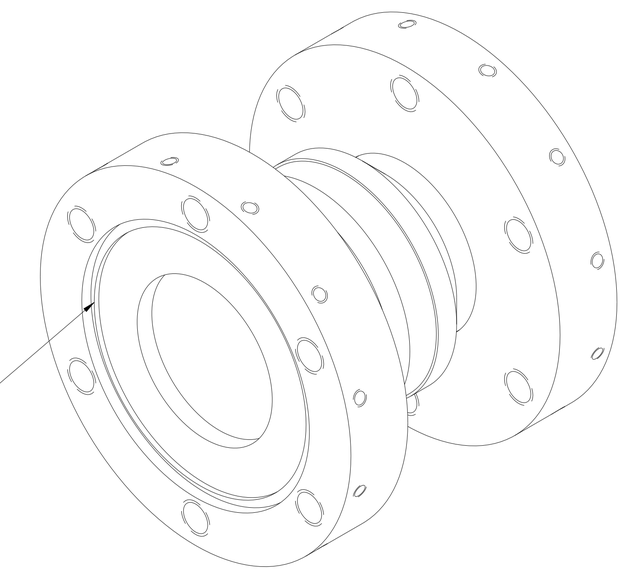

PROTECT KNIFE EDGE
ON BOTH SIDES
DURING WELDING

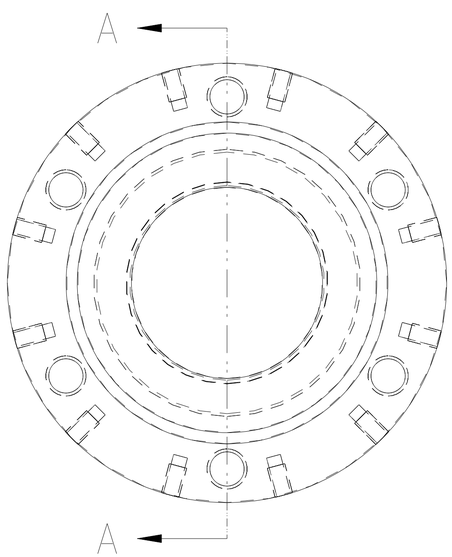

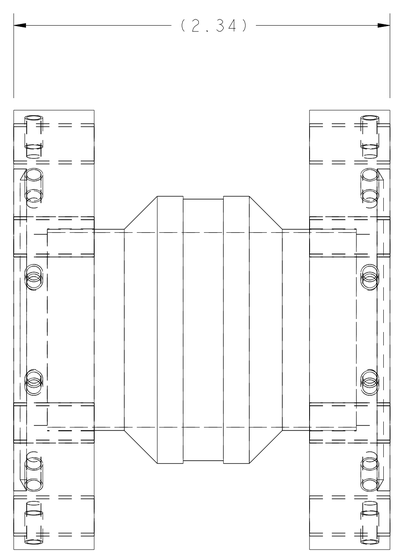

NOTES
1. FINISHED PART TO BE VACUUM TIGHT. LEAK RATE NOT TO EXCEED 1 x 10^{-8} torr - l/sec He.
2. BAG AFTER WELDING TO MAINTAIN HIGH VACUUM CLEANLINESS

ITEM	PART NO	REQD	DESCRIPTION	MATERIAL
2	CERAMASEAL 9999-03-W	1	ELECTRIC ISOLATOR VACUUM PIPE	KOVAR & ALUMINA OXIDE
1	25B131	2	BCM1 THREADED CONFLAT FLANGE	2.75'' SS CONFLAT FLANGE

REV	DWG	CHK	ZONE	DATE	CHANGES

UNLESS OTHERWISE SPECIFIED
PROJECTION:
TOLERANCES: X.X ± 0.1 FRAC. ± 1/64; X.XX ± 0.03 Angles ± 1.0°; X.XXX ± 0.010 FINISH 125
DO NOT SCALE PRINT
THREADS ARE CLASS 2
CHAMFER ENDS OF ALL SCREW TREADS 30°
CUT ROUND, 1.5 THREAD RELIEF ON MACHINED THREADS
BREAK EDGES .016 MAX. ON MACHINED WORK
REMOVE BURRS, WELD SPLATTER & LOOSE SCALE
IN ACCORDANCE WITH ASME Y14.5M & B46.1

SHOP ORDERS
ACCT NO. - NO. REQD -
DEL TO -
SER NO. -
DATE ISSD -
DATE REQD -
SURFACE TREATMT ULTRA HIGH VACUUM CLEANING
IDENT METHOD TAG
PROJECT NUMBER na
PROJECT NAME SPALLATION NEUTRON SOURCE
DWG BY TREVOR GOULDING DATE 22-Mar-00
CHK BY DARYL OSHATZ DATE
APR BY DARYL OSHATZ DATE -

ERNEST ORLANDO LAWRENCE
BERKELEY NATIONAL LABORATORY
UNIVERSITY OF CALIFORNIA - BERKELEY

SNS-FES MEBT
MECHANICAL SUBSYSTEMS
BCM 1 ISOLATOR PIPE WITH CONFLAT FLANGES

MICROFILMED: | DWG. TYPE ASSEM | SHOWN ON - | SCALE: 2/1 | DO NOT SCALE PRINTS
PATENT CLEAR: | DESIGN ACCT. NO. - | CATEGORY CODE FE3313 | DWG. NO. 25B1384 | SIZE | REV. A
SHEET 1 OF 1

Dwg. File: 25B138 Model File: 25B138