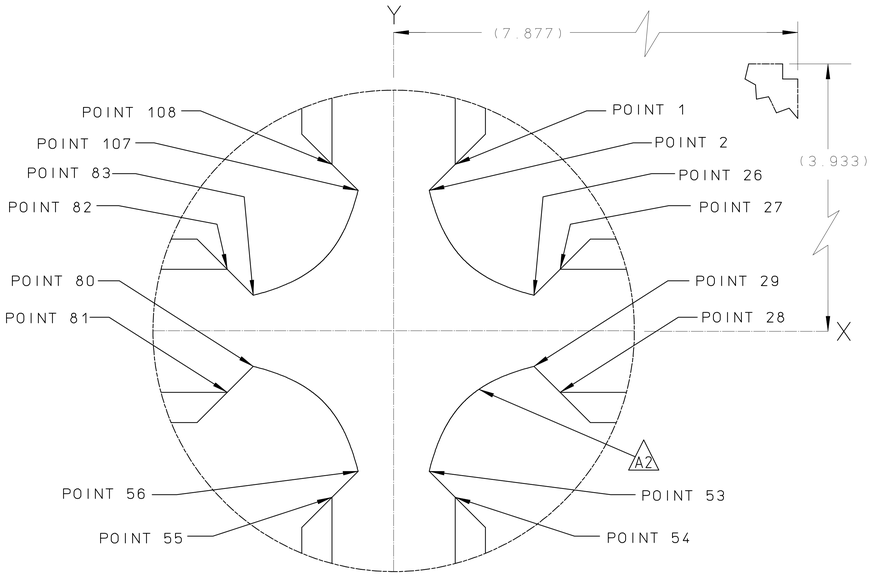

DETAIL A
SCALE: 2X

NOTES:
1. ALL DIMENSIONS ARE IN INCHES.
2. ESTIMATED WT.: 64 LBS.
3. AFTER EDM PROCESS, DISASSEMBLE AND PLATE PER LBNL SPECIFICATION M912.
4. OBTAIN INDICATED ASSEMBLY THICKNESS BY GRINDING PRIOR TO EDM PROCESS.

POLE TIP COORDINATES - ALL NUMBERS BASIC

POINT 1 TO POINT 2: STRAIGHT LINE
POINT 2 TO POINT 26: HYPERBOLA
POINT 26 TO POINT 27: STRAIGHT LINE
POINT 28 TO POINT 29: STRAIGHT LINE
POINT 29 TO POINT 53: HYPERBOLA
POINT 53 TO POINT 54: STRAIGHT LINE
POINT 55 TO POINT 56: STRAIGHT LINE
POINT 56 TO POINT 80: HYPERBOLA
POINT 81 TO POINT 82: STRAIGHT LINE
POINT 82 TO POINT 83: STRAIGHT LINE
POINT 83 TO POINT 107: HYPERBOLA
POINT 107 TO POINT 108: STRAIGHT LINE
(HYPERBOLA FORMULA $2XY = r^2$ r = 0.827 INCH)

POINT	-X-	-Y-	POINT	-X-	-Y-	POINT	-X-	-Y-
1	.510	1.378	37	.718	-.476	73	-.762	-.449
2	.294	1.162	38	.679	-.503	74	-.810	-.422
3	.308	1.110	39	.644	-.531	75	-.856	-.399
4	.328	1.041	40	.611	-.560	76	-.914	-.374
5	.353	.969	41	.585	-.585	77	-.969	-.353
6	.374	.914	42	.560	-.611	78	-1.041	-.328
7	.399	.856	43	.531	-.644	79	-1.110	-.308
8	.422	.810	44	.503	-.679	80	-1.162	-.294
9	.449	.762	45	.476	-.718	81	-1.378	-.510
10	.476	.718	46	.449	-.762	82	-1.378	.510
11	.503	.679	47	.422	-.810	83	-1.162	.294
12	.531	.644	48	.399	-.856	84	-1.110	.308
13	.560	.611	49	.374	-.914	85	-1.041	.328
14	.585	.585	50	.353	-.969	86	-.969	.353
15	.611	.560	51	.328	-1.041	87	-.914	.374
16	.644	.531	52	.308	-1.110	88	-.856	.399
17	.679	.503	53	.294	-1.162	89	-.810	.422
18	.718	.476	54	.510	-1.378	90	-.762	.449
19	.762	.449	55	-.510	-1.378	91	-.718	.476
20	.810	.422	56	-.294	-1.162	92	-.679	.503
21	.856	.399	57	-.308	-1.110	93	-.644	.531
22	.914	.374	58	-.328	-1.041	94	-.611	.560
23	.969	.353	59	-.353	-.969	95	-.585	.585
24	1.041	.328	60	-.374	-.914	96	-.560	.611
25	1.110	.308	61	-.399	-.856	97	-.531	.644
26	1.162	.294	62	-.422	-.810	98	-.503	.679
27	1.378	.510	63	-.449	-.762	99	-.476	.718
28	1.378	-.510	64	-.476	-.718	100	-.449	.762
29	1.162	-.294	65	-.503	-.679	101	-.422	.810
30	1.110	-.308	66	-.531	-.644	102	-.399	.856
31	1.041	-.328	67	-.560	-.611	103	-.374	.914
32	.969	-.353	68	-.585	-.585	104	-.353	.969
33	.914	-.374	69	-.611	-.560	105	-.328	1.041
34	.856	-.399	70	-.644	-.531	106	-.308	1.110
35	.810	-.422	71	-.679	-.503	107	-.294	1.162
36	.762	-.449	72	-.718	-.476	108	-.510	1.378

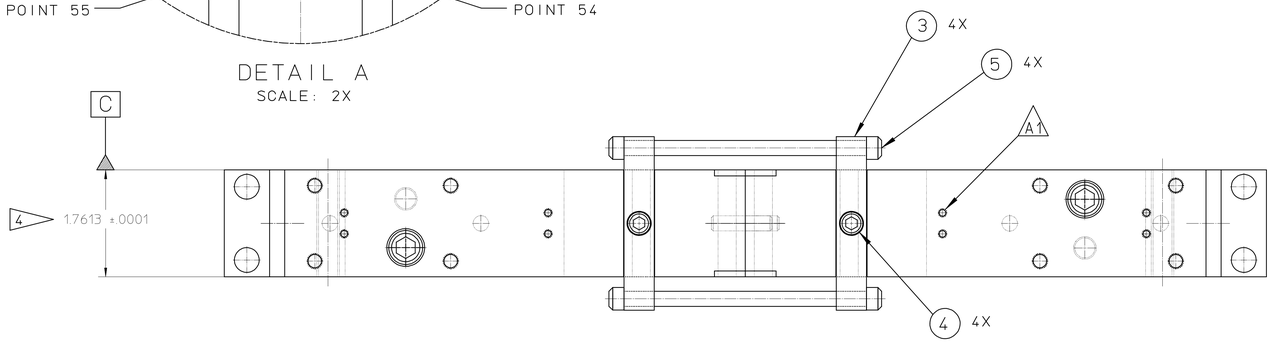

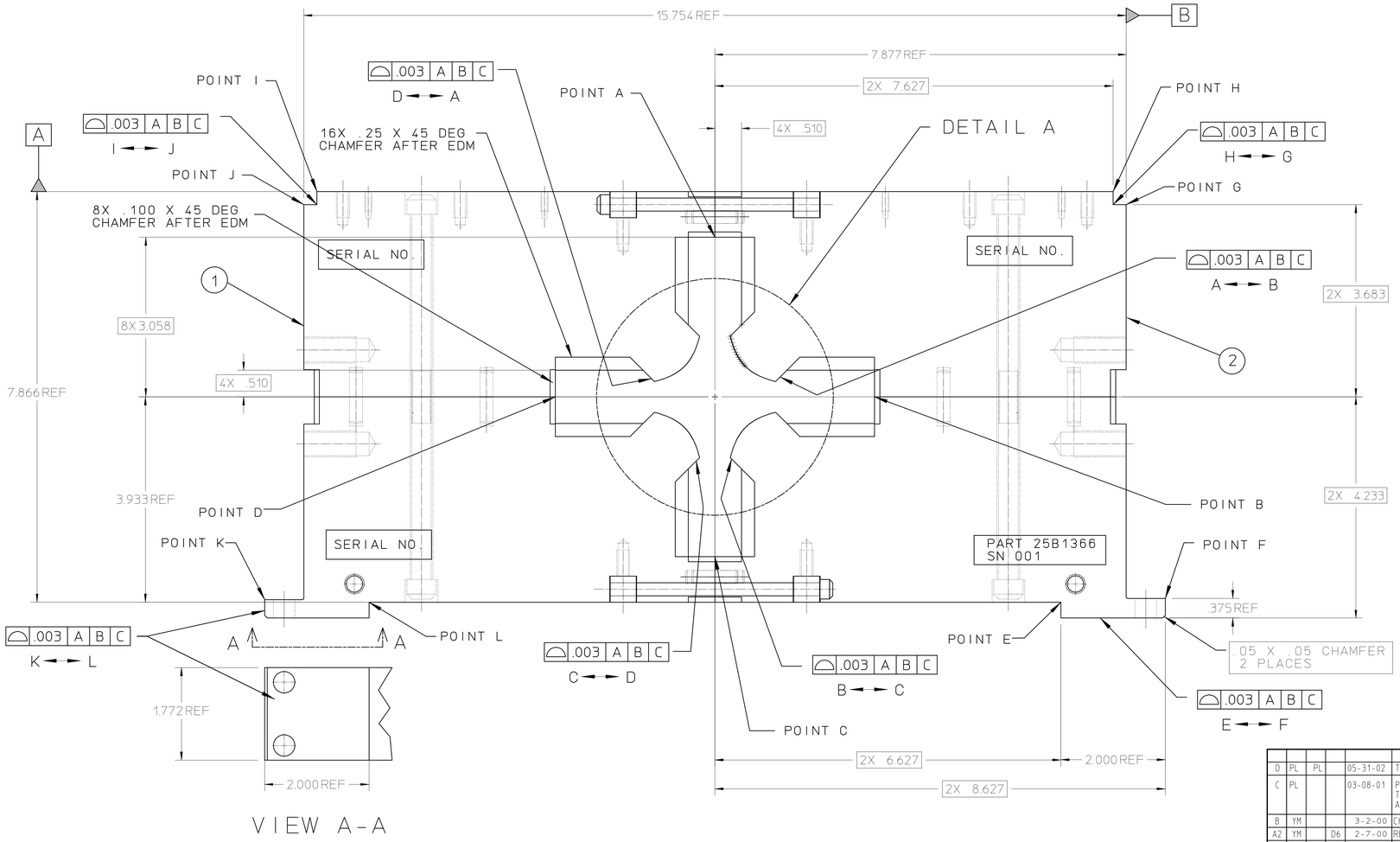

VIEW A-A

25B1366D

REQD	ITEM	PART NO.	DESCRIPTION
1	1	25B1324	POLE PIECE ASSEMBLY - LEFT HAND
1	2	25B1334	POLE PIECE ASSEMBLY - RIGHT HAND
4	3	25B1234	CROSSBAR
4	4		SCREW, SOC. HD., 1/4-20UNC-2A X .75" LONG, SST.
4	5		SCREW, SOC. HD., 1/4-20UNC-2A X 4.25" LONG, SST.

REV	DWG	CHK	ZONE	DATE	CHANGES
D	PL	PL		05-31-02	TITLE WORD "APERTURE" WAS "APERATURE"
C	PL			03-08-01	PROFILE TOLERANCE .003 WAS .001, 8PL TO REFLECT AS-BUILT CONDITION. ADDED NOTE 4.
B	YM			3-2-00	CHANGED CHAMFER AND POLE PROFILE
A2	YM		D6	2-7-00	RELOCATED POLE PROFILE.
A1	YM		C5	2-7-00	RELOCATED 6-32UNC TAPPED HOLES

UNLESS OTHERWISE SPECIFIED
TOLERANCES: X ± - FRAC. ±1/64; .XX ± .02 ANGLES ± 1°; .XXX ± .005 FINISH 125
THREADS ARE CLASS 2
CHAMFER ENDS OF ALL SCREW THREADS 30°, CUT 1.5 PITCH THRD RELIEF WITH ROUND NOSE TOOL ON MACHINE CUT THREADS.
BREAK EDGES .016 MAX ON MACHINED WORK.
REMOVE BURRS WELD SPLATTER & LOOSE SCALE
REFERENCES: ANSI Y14.5 & B46.1.

SHOP ORDERS
ACCT. NO. | SERIAL NO.
DATE ISSD. | DATE REQD. | NO. REQD.
DELIVER TO
SURFACE TREATMENT: DEGREASE
IDENT. METH.: TAG
DWG. BY: Y. MINAMIHARA DATE 12-15-99
CHK. BY: DATE

LAWRENCE BERKELEY LABORATORY
UNIVERSITY OF CALIFORNIA-BERKELEY
SNS - FE MEBT
QUADRUPOLE MAGNET
POLE PIECE ASSEMBLY - 42MM APERTURE

PATENT CLEAR	DWG. TYPE	SHOWN ON	SCALE	DO NOT SCALE PRINTS
	ASSEMBLY		FULL	

MICROFILMED	DESIGN ACCT. NO.	CATEGORY CODE	DWG. NO	SIZE	REV
		FE3312	25B1366	D	