REQ	ITEM	PART NUMBER	DESCRIPTION
AR	1		COPPER MAGNET CONDUCTOR (.1875 SQ W/.125 ID)
			APPROX. LENGTH 180" (SEE NOTE #2)
AR	2		EPOXY AND FIBERGLASS TAPE

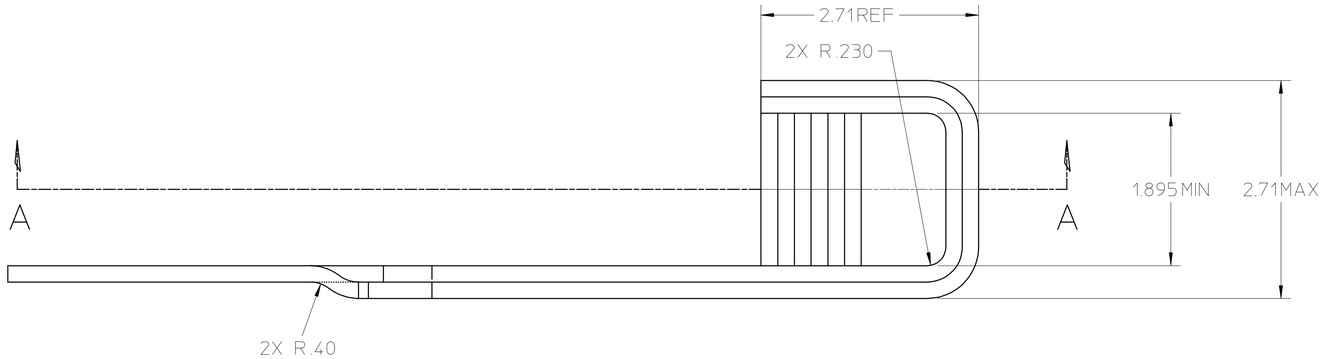

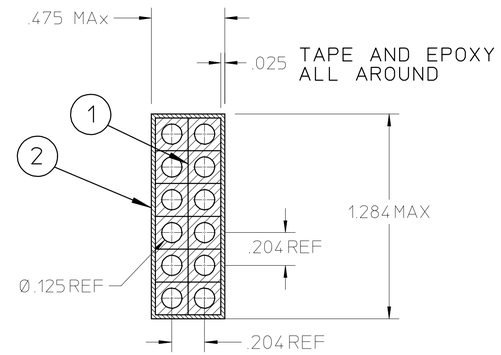

VIEW A
SCALE: 2X

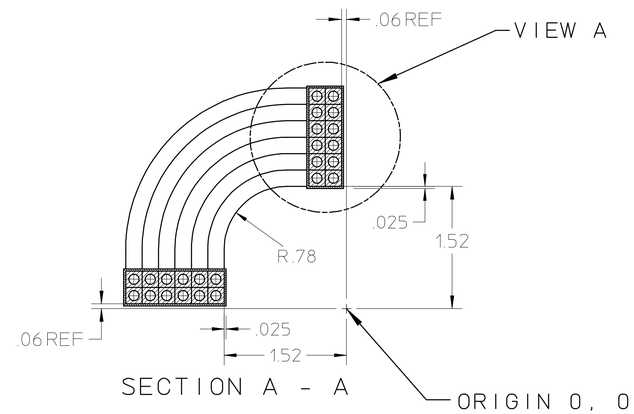

SECTION A - A

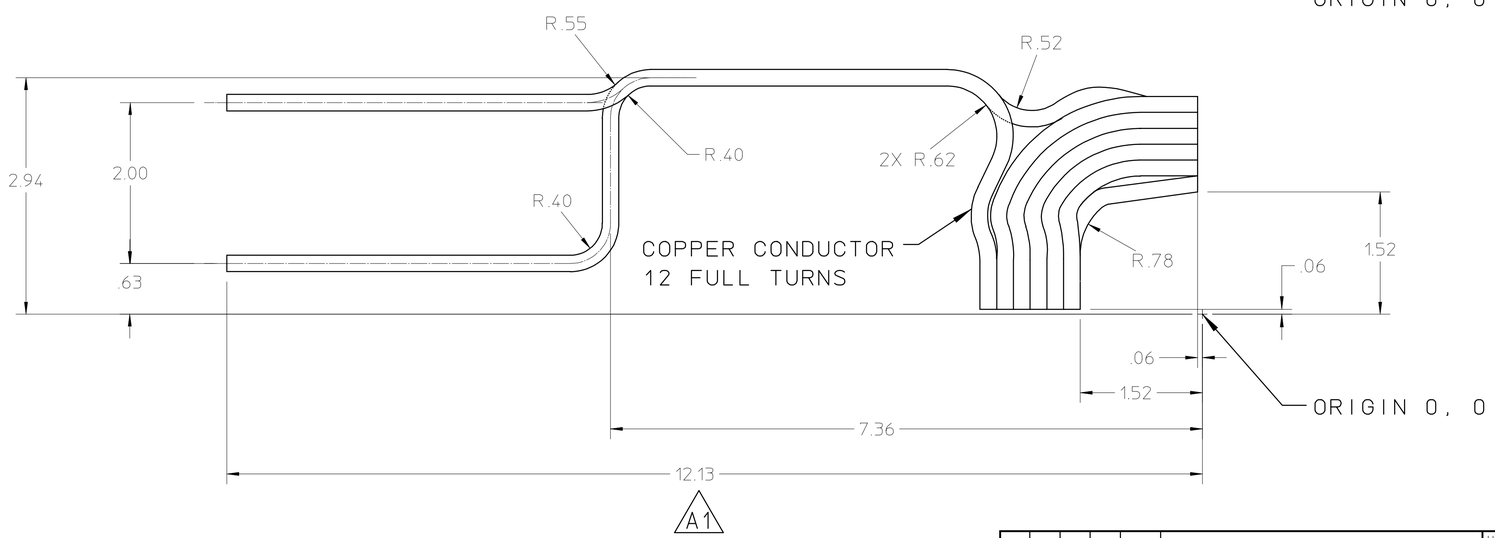

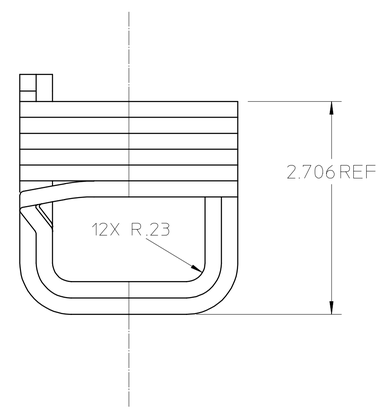

25B1284A

NOTES:
1. ALL DIMENSIONS ARE IN INCHES.
2. COPPER MAGNET CONDUCTOR PER LBNL SPEC: M919.
WITH INSULATION PER LBNL SPEC: M920.

REV	DWG	CHK	ZONE	DATE	CHANGES
A1	YM		A6	3-3-00	WAS 11.13 LONG.
A	YM			3-3-00	REMOVED TUBE END DETAIL AND INSULATION NOTES.

UNLESS OTHERWISE SPECIFIED
TOLERANCES: .X ± – FRAC. ±1/64; .XX ± .02 ANGLES ±1°; .XXX ± .005 FINISH 125√
THREADS ARE CLASS 2.
CHAMFER ENDS OF ALL SCREW THREADS 30°.
CUT 1.5 PITCH THRD RELIEF WITH ROUND NOSE TOOL ON MACHINE CUT THREADS.
BREAK EDGES .016 MAX. ON MACHINED WORK
REMOVE BURRS WELD SPLATTER & LOOSE SCALE
REFERENCES: ANSI Y14.5 & B46.1.

SHOP ORDERS
ACCT NO. | SERIAL NO.
DATE ISSD. | DATE REQD. | NO. REQD.
DELIVER TO
SURFACE TREATMENT: DEGREASE
IDENT. METH.: TAG
DWG. BY: Y. MINAMIHARA DATE: 12-15-99
CHK. BY | DATE

LAWRENCE BERKELEY LABORATORY
UNIVERSITY OF CALIFORNIA-BERKELEY
SNS - FES MEBT
MECHANICAL BEAM TRANSPORT SYSTEMS - QUADS
LEFT COIL WINDING

PATENT CLEAR	DWG. TYPE	SHOWN ON	SCALE	DO NOT SCALE PRINTS
	DETAIL		FULL	
MICROFILMED	DESIGN ACCT NO.	CATEGORY CODE	DWG. NO.	SIZE / REV.
		FE3312	25B1284	A