REQ	ITEM	PART NUMBER	DESCRIPTION
			OFE COPPER, .375 THICK PLATE

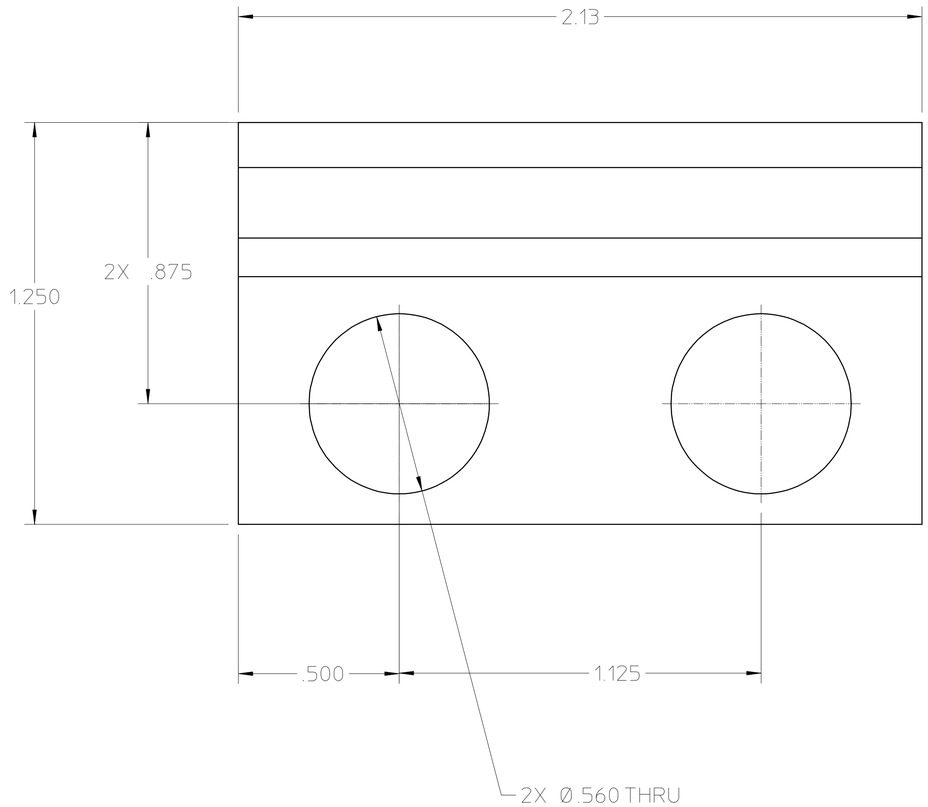

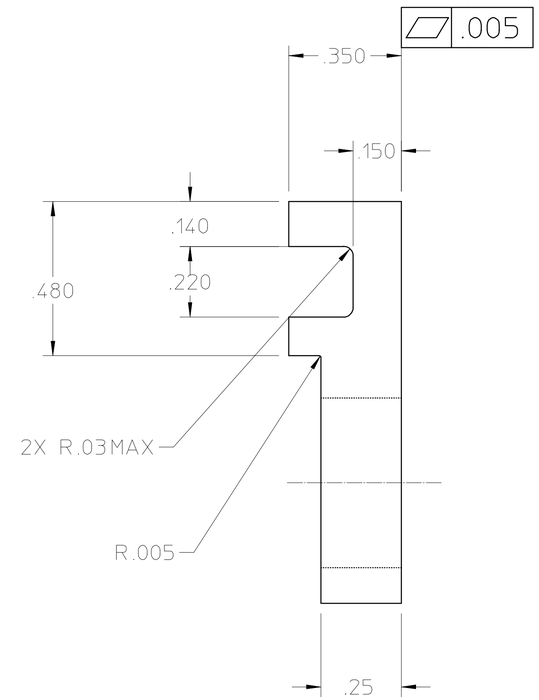

25B1224A

NOTES: 1. ALL DIMENSIONS ARE IN INCHES.

REV	DWG	CHK	ZONE	DATE	CHANGES
A	YM			11-17-00	REMOVED NOTE 2 TO GOLD FLASH PART

UNLESS OTHERWISE SPECIFIED

TOLERANCES: .X ± – ; FRAC. ± 1/64 ; .XX ± .02 ; ANGLES ± 1° ; .XXX ± .005 ; FINISH 125√

THREADS ARE CLASS 2
CHAMFER ENDS OF ALL SCREW THREADS 30°.
CUT 1.5 PITCH THRD RELIEF WITH ROUND NOSE TOOL ON MACHINE CUT THREADS.
BREAK EDGES .016 MAX. ON MACHINED WORK
REMOVE BURRS WELD SPLATTER & LOOSE SCALE
REFERENCES: ANSI Y14.5 & B46.1.

SHOP ORDERS

ACCT NO. | SERIAL NO. | DATE ISSD | DATE REQD. | NO. REQD. | DELIVER TO

SURFACE TREATMENT: DEGREASE
IDENT. METH.: TAG
DWG. BY: Y. MINAMIHARA — DATE: 12-15-99
CHK. BY | DATE

LAWRENCE BERKELEY LABORATORY
UNIVERSITY OF CALIFORNIA-BERKELEY

SNS - FES MEBT

MECHANICAL BEAM TRANSPORT SYSTEMS - QUADS

CENTER OVERLAPPING FLAG

PATENT CLEAR	DWG. TYPE	SHOWN ON	SCALE 4X	DO NOT SCALE PRINTS
	DETAIL			
MICROFILMED	DESIGN ACCT NO.	CATEGORY CODE FE3312	DWG. NO. 25B1224	SIZE A	REV. A