REQ	ITEM	PART NUMBER	DESCRIPTION
			OFE COPPER, .375 THICK PLATE

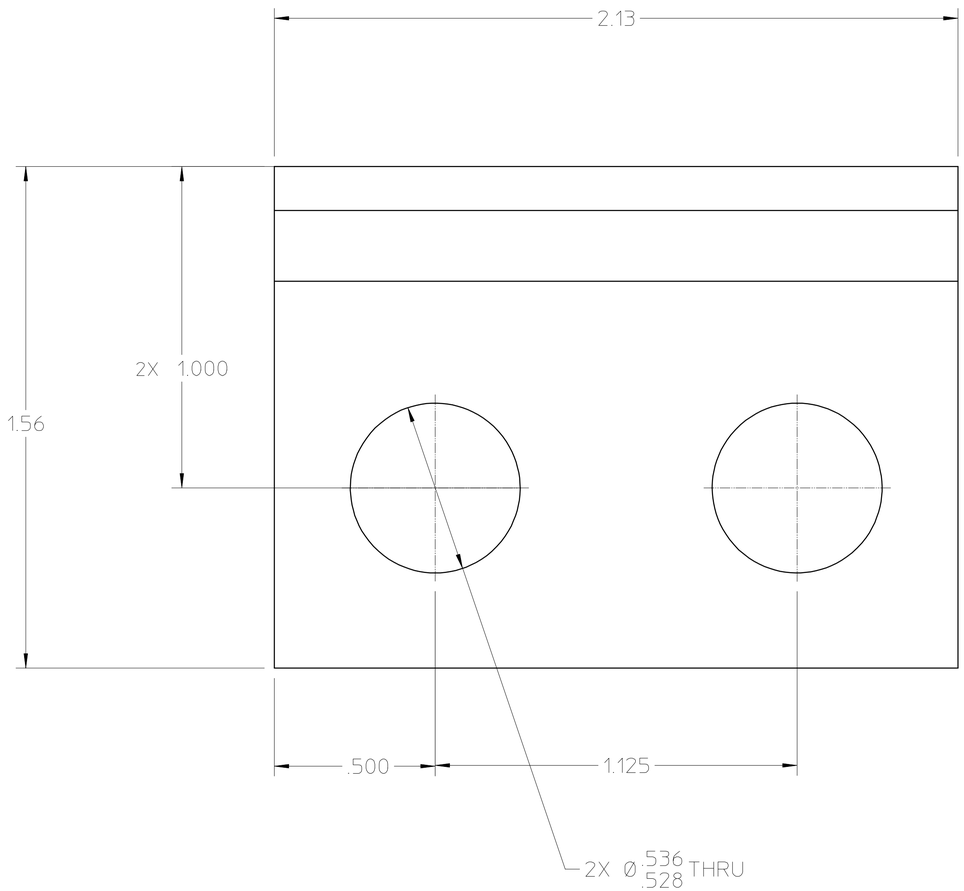

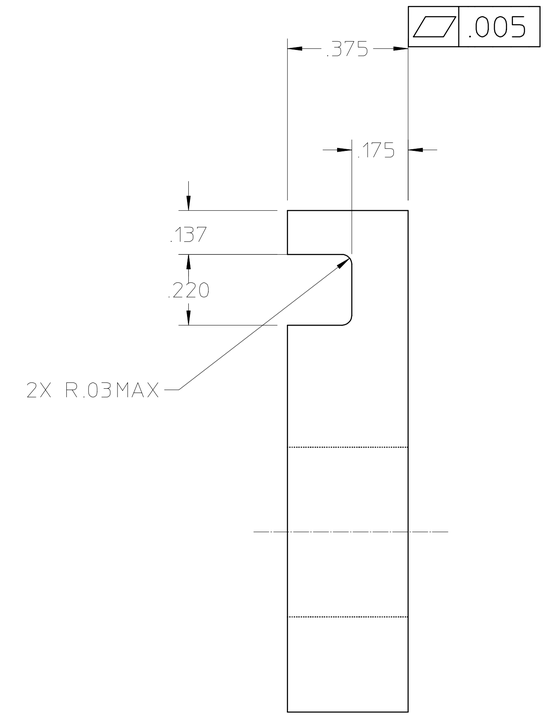

25B1224

NOTES: 1. ALL DIMENSIONS ARE IN INCHES.

REV	DWG	CHK	ZONE	DATE	CHANGES

UNLESS OTHERWISE SPECIFIED

TOLERANCES		
	.X ± –	FRAC. ±1/64
	.XX ± .02	ANGLES ±1°
	.XXX ± .010	FINISH 125√

THREADS ARE CLASS 2.
CHAMFER ENDS OF ALL SCREW THREADS 30°.
CUT 1.5 PITCH THRD RELIEF WITH ROUND NOSE TOOL ON MACHINE CUT THREADS.
BREAK EDGES .016 MAX. ON MACHINED WORK
REMOVE BURRS WELD SPLATTER & LOOSE SCALE
REFERENCES: ANSI Y14.5 & B46.1.

SHOP ORDERS

ACCT NO.		SERIAL NO.
DATE ISSD.	DATE REQD.	NO. REQD.
DELIVER TO		
SURFACE TREATMENT	DEGREASE	
IDENT. METH.	TAG	
DWG. BY	Y. MINAMIHARA	DATE 12-15-99
CHK. BY		DATE

LAWRENCE BERKELEY LABORATORY
UNIVERSITY OF CALIFORNIA-BERKELEY

SNS - FES MEBT

MECHANICAL BEAM TRANSPORT SYSTEMS - QUADS

NARROW LOWER FLAG

PATENT CLEAR	DWG. TYPE	SHOWN ON	SCALE 4X	DO NOT SCALE PRINTS
	DETAIL			
MICROFILMED	DESIGN ACCT NO.	CATEGORY CODE FE3312	DWG. NO. 25B1204	SIZE / REV.