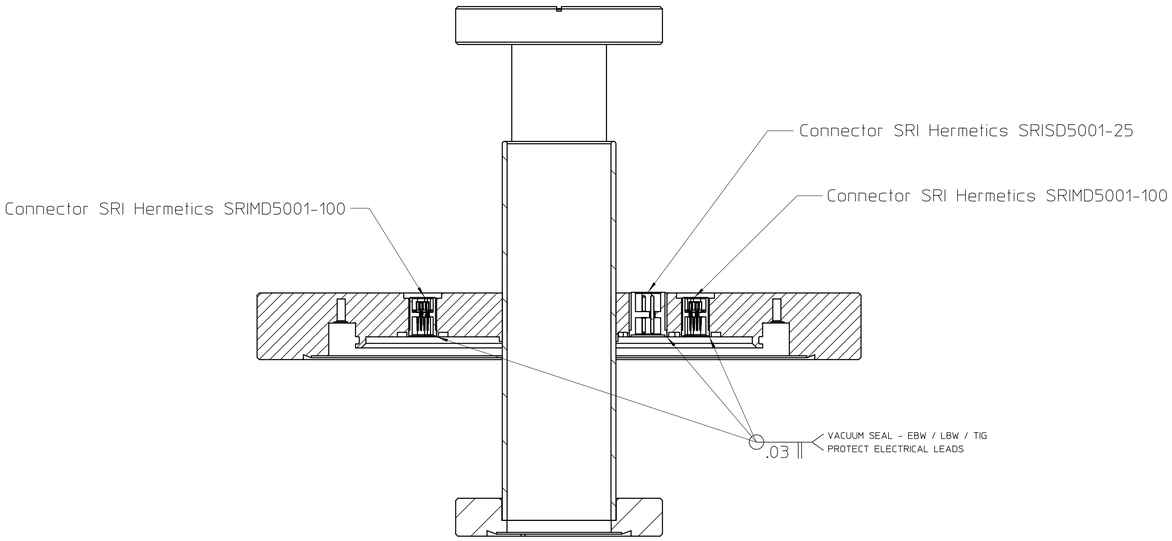

Section B-B

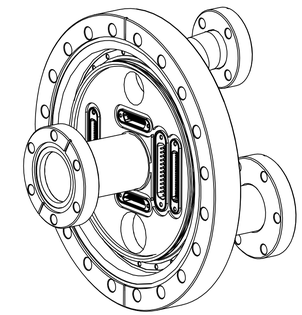

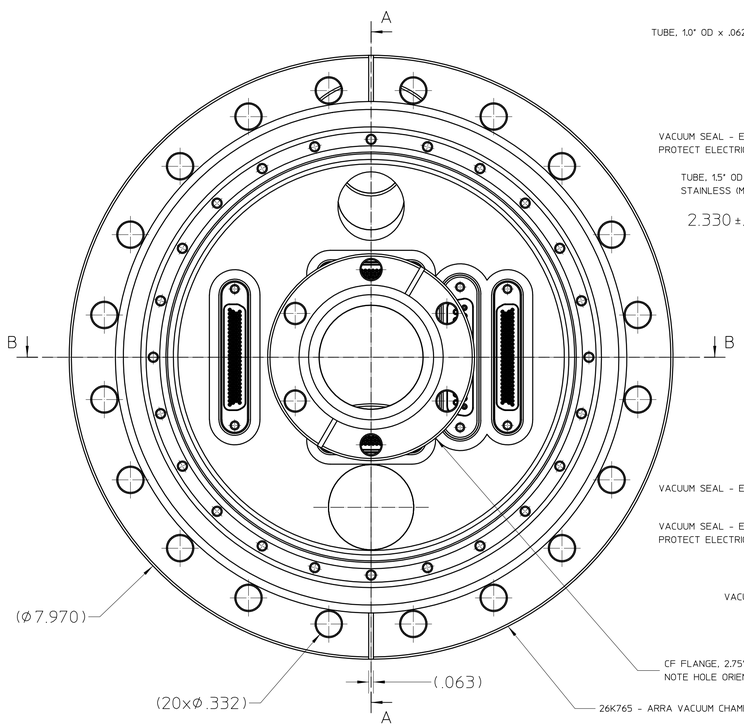

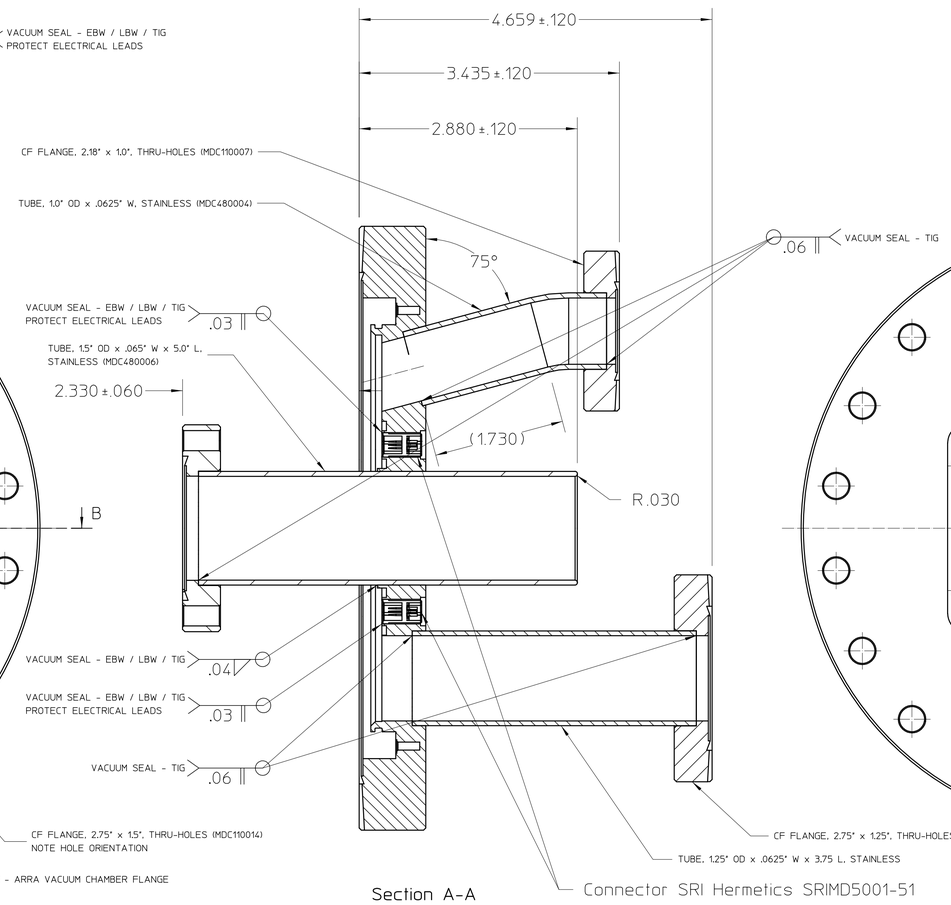

Section A-A

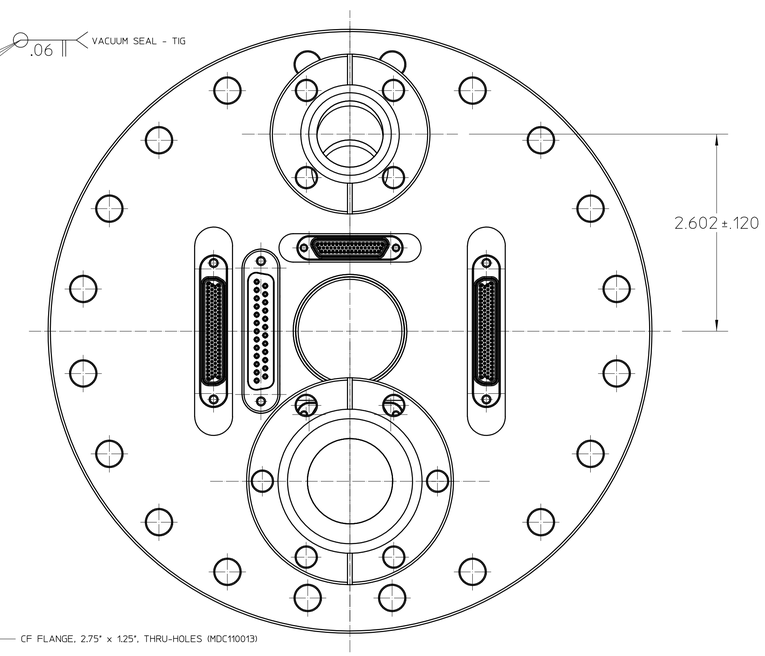

REV	AUTHOR	APPROVER	DATE	CHANGE DESCRIPTION
A	andresen			INITIAL REVISION

UNLESS OTHERWISE SPECIFIED
TOLERANCES: .X± .- .XX± .-- .XXX± .---
FRACTIONS: ± -/--
ANGLES: ± -.-°/INCH
MACH. SURFS.: 125✓ OR BETTER
REF:ASME Y14.5M-1994, THREADS ARE CLASS 2
BREAK EDGES .016 MAX. ON MACHINED WORK
REMOVE BURRS, WELD SPLATTER & LOOSE SCALE

MAT 2: . NOTES:
MAT 1: . NOTES:

PROJECT NAME: DETECTOR SYSTEMS
UNIQUE NUMBER: DS-0000-1475
DO NOT SCALE PRINT
CATEGORY CODE: DS1040
SCALE: 1 : 1
THIRD ANGLE PROJECTION

ERNEST ORLANDO LAWRENCE
BERKELEY NATIONAL LABORATORY
UNIVERSITY OF CALIFORNIA

SILICON DETECTOR DEVELOPMENT GROUP
ARRA 1K FRAME STORE - INSTRUMENTATION
ARRA VACUUM FLANGE ASSEMBLY

SHEET 1 OF 1 | SIZE: D | DWG NO: 26K766 | REV A