Sector Drawing Package
5-July, 2001

This package was assembled for convenient printing of all Sector Drawings. It should be used for reference, but not production. All approved drawings and specifications are located in the EDMS documents indicated on the following two pages. This document will be updated occasionally and dated, but does not represent approved versions of drawings.

For more information, please contact:

Eric Anderssen: ECAnderssen@lbl.gov

Or,

Marco Olcese: Marco.Olcese@cern.ch

Item No	Eq. Code								Description	Part No.	ATLIP-ED	Auxilliary Dwgs.
ATL-0000005546	**IPHLD**	**1**							**Disk Sector**	**21F414**	**ATL-IP-ED-0028**	
ATL-0000007318	IPHL		1						Parylene			
ATL-0000007282	**IPHLD**		**1**						**Uncoated Disk Sector**	**21F415**	**ATL-IP-ED-0029**	
ATL-0000007283	IPHLD			3					Sector T-washer Mount	21F360	ATL-IP-ED-0030	
ATL-0000007284	IPHLD			1					Adhesive (Sector)			
ATL-0000007285	**IPHLD**			**1**					**Sector Body Assembly**	**21F410**	**ATL-IP-ED-0031**	
ATL-0000007285	***IPHLD***								***Application Detail***		**ATL-IP-ED-0044**	***21F405***
ATL-0000007285	***IPHLD***								***Application Detail***		**ATL-IP-ED-0045**	***21F407***
ATL-0000007319	IPHLD								Film Adhesive (BULK)			
ATL-0000005541	IPHLD				1				Film Adhesive (Sector Facing)	21F425	ATL-IP-ED-0032	
ATL-0000007286	**IPHLD**				**1**				**Sector Non-mountside Facing Assembly**	**21F406**	**ATL-IP-ED-0033**	
ATL-0000005545	IPHLD					1			Sector Facing	21F355	ATL-IP-ED-0034	
ATL-0000007287	IPHLD					1			Wedge Hardpoint Sector Support	21F359	ATL-IP-ED-0035	
ATL-0000007288	IPHLD					1			Beam Hardpoint Sector Support	21F358	ATL-IP-ED-0036	
ATL-0000007319	IPHLD					1			Film Adhesive (BULK)			
ATL-0000007289	**IPHLD**				**1**				**Sector Mountside Facing Assembly**	**21F404**	**ATL-IP-ED-0037**	
ATL-0000007289	***IPHLD***								***Assy Detail***		**ATL-IP-ED-0040**	***21F401***
ATL-0000007289	***IPHLD***								***Assy Detail***		**ATL-IP-ED-0041**	***21F402***
ATL-0000007289	***IPHLD***								***Assy Detail***		**ATL-IP-ED-0042**	***21F403***
ATL-0000007289	***IPHLD***								***Assy Detail***		**ATL-IP-ED-0043**	***21F416-3***
ATL-0000005545	IPHLD					1			Sector Facing	21F355	ATL-IP-ED-0034	
ATL-0000005544	IPHLD					1			Sector Core Blank	21F416-0	ATL-IP-ED-0038	
ATL-0000005544	*IPHLD*								*Machining Detail*		ATL-IP-ED-0039	*21F416-1*
ATL-0000005544	*IPHLD*								*Machining Detail*		ATL-IP-ED-0043	*21F416-3*
ATL-0000005541	IPHLD					1			Film Adhesive (Sector Facing)	21F425	ATL-IP-ED-0032	
ATL-0000007290	**IPHLD**				**1**				**Sector Tube Assembly w/Thermal Grease**	**21F471**	**ATL-IP-ED-0046**	
ATL-0000007290	***IPHLD***								***Application Detail***		**ATL-IP-ED-0047**	***21F470***
ATL-0000005542	IPHLD					1			Thermal Grease (Sector Tube)			
ATL-0000007291	**IPHLD**					**1**			**Sector Tube Assembly**	**21F409**	**ATL-IP-ED-0048**	
ATL-0000007284	IPHLD						1		Adhesive (Sector)			
ATL-0000007293	IPHLD						2		Sector Tube Strain-relief	21F357	ATL-IP-ED-0049	
ATL-0000007294	**IPHLD**						**1**		**Sector Tube with Fittings**	**21F408**	**ATL-IP-ED-0050**	
ATL-0000005543	IPHLD							1	Sector Aluminium Tube	21F353	ATL-IP-ED-0051	
ATL-0000005539	IPHLD							2	Sector Fitting	21F347	ATL-IP-ED-0052	

Item No	Eq. Code								Description	Spec/Material	ATLIP-ES
ATL-0000005546	**IPHLD**	**1**							**Disk Sector**		**N/A**
ATL-0000007318	IPHL		1						Parylene	Sector Parylene spec	ATL-IP-ES-0036
ATL-0000007282	**IPHLD**		**1**						**Uncoated Disk Sector**		**N/A**
ATL-0000007283	IPHLD			3					Sector T-washer Mount	Victrex PEEK Rod	ATL-IP-ES-0037
ATL-0000007284	IPHLD			1					Adhesive (Sector)	HYSOL EA 9396NA	ATL-IP-ES-0029
ATL-0000007285	**IPHLD**			**1**					**Sector Body Assembly**		**N/A**
ATL-0000007285	***IPHLD***								***Application Detail***		**N/A**
ATL-0000007285	***IPHLD***								***Application Detail***		**N/A**
ATL-0000007319	IPHLD								Film Adhesive (BULK)	BRYTE E01189-2M	ATL-IP-ES-0030
ATL-0000005541	IPHLD				1				Film Adhesive (Sector Facing)	BRYTE E01189-2M	ATL-IP-ES-0030
ATL-0000007286	**IPHLD**				**1**				**Sector Non-mountside Facing Assembly**		**N/A**
ATL-0000005545	IPHLD					1			Sector Facing	Allcomp P30 QI-CC	ATL-IP-ES-0032
ATL-0000007287	IPHLD					1			Wedge Hardpoint Sector Support	BF Goodrich 3D-CC	ATL-IP-ES-0031
ATL-0000007288	IPHLD					1			Beam Hardpoint Sector Support	BF Goodrich 3D-CC	ATL-IP-ES-0031
ATL-0000007319	IPHLD					1			Film Adhesive (BULK)	BRYTE E01189-2M	ATL-IP-ES-0030
ATL-0000007289	**IPHLD**				**1**				**Sector Mountside Facing Assembly**		**N/A**
ATL-0000007289	***IPHLD***								***Assy Detail***		**N/A**
ATL-0000007289	***IPHLD***								***Assy Detail***		**N/A**
ATL-0000007289	***IPHLD***								***Assy Detail***		**N/A**
ATL-0000007289	***IPHLD***								***Assy Detail***		**N/A**
ATL-0000005545	IPHLD					1			Sector Facing	Allcomp P30 QI-CC	ATL-IP-ES-0032
ATL-0000005544	IPHLD					1			Sector Core Blank	Allcomp Densified C-Foam	ATL-IP-ES-0033
ATL-0000005544	*IPHLD*								*Machining Detail*		*N/A*
ATL-0000005544	*IPHLD*								*Machining Detail*		*N/A*
ATL-0000005541	IPHLD					1			Film Adhesive (Sector Facing)	BRYTE E01189-2M	ATL-IP-ES-0030
ATL-0000007290	**IPHLD**				**1**				**Sector Tube Assembly w/Thermal Grease**		**N/A**
ATL-0000007290	***IPHLD***								***Application Detail***		**N/A**
ATL-0000005542	IPHLD					1			Thermal Grease (Sector Tube)	AIT CGL 7018-LV-XF	ATL-IP-ES-0034
ATL-0000007291	**IPHLD**					**1**			**Sector Tube Assembly**		**N/A**
ATL-0000007284	IPHLD						1		Adhesive (Sector)	HYSOL EA 9396NA	ATL-IP-ES-0029
ATL-0000007293	IPHLD						2		Sector Tube Strain-relief	Al 6061-T651	N/A
ATL-0000007294	**IPHLD**						**1**		**Sector Tube with Fittings**	Weld/Leak spec.	**ATL-IP-ES-0038**
ATL-0000005543	IPHLD							1	Sector Aluminium Tube	Tube Extrusion Spec	ATL-IP-ES-0035
ATL-0000005539	IPHLD							2	Sector Fitting	Al 6063-T6	N/A

ITEM	PART NO	REQD	DESCRIPTION	MATERIAL
2	21F410	1	BARE SECTOR BODY ASSEMBLY	-
1	21F360	3	T-WASHER, SECTOR MOUNT	VICTREX PEEK

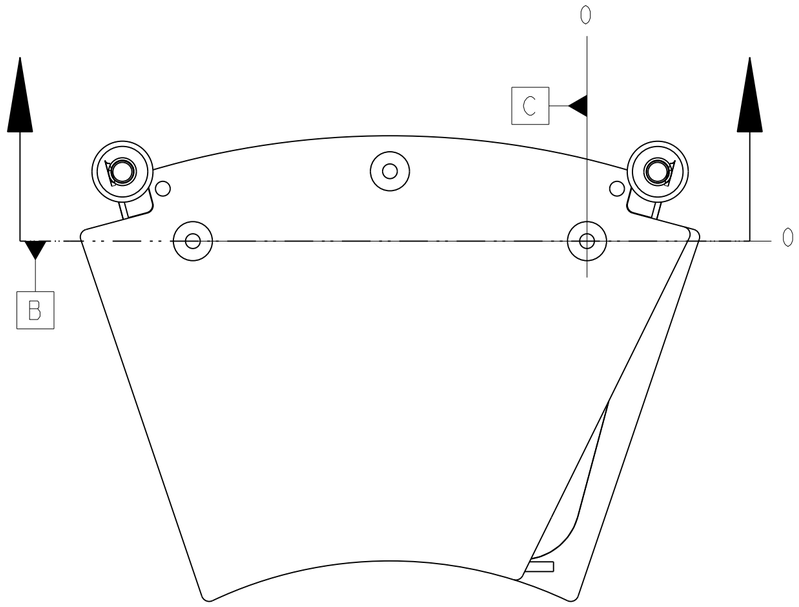

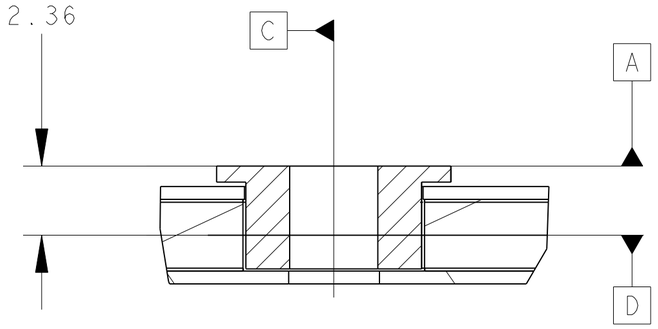

FACED_T-WASHER
6/1

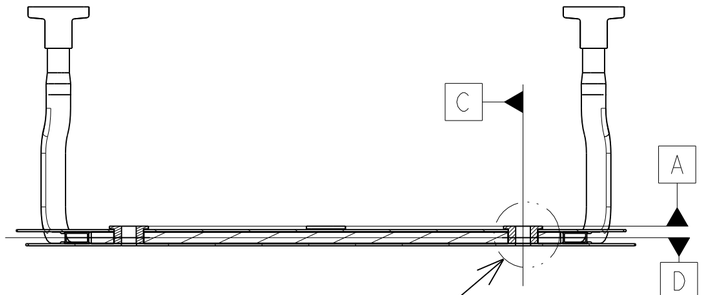

FACED T-WASHER

SCALE 1/1

Mask tube ends and mounting surfaces
Parylene C coat 8-10 μ thick

REV	DWG	CHK	ZONE	DATE	CHANGES

UNLESS OTHERWISE SPECIFIED

TOLERANCES			
	X.X ± 0.1	FRAC. ± 1/64	
	X.XX ± 0.01	Angles ± 0.50°	
	X.XXX ± 0.001	FINISH 125 √(μin)	

DO NOT SCALE PRINT

THREADS ARE CLASS 2
CHAMFER ENDS OF ALL SCREW TREADS 30°
CUT ROUND, 1.5 THREAD RELIEF ON MACHINED THREADS
BREAK EDGES .016 MAX. ON MACHINED WORK
REMOVE BURRS, WELD SPLATTER & LOOSE SCALE
IN ACCORDANCE WITH ASME Y14.5M & B46.1

SHOP ORDERS

ACCT NO.	See J.O.	NO. REQD	60
DEL TO	Jon Wirth		
SURFACE TREATMT			
IDENT METHOD	TAG		
PROJECT NUMBER	ATL-IP-ED-0029		
PROJECT NAME	US ATLAS SILICON SUBSYSTEM		
DWG BY	D. UKEN	DATE	18-JUN-01
CHK BY	E. ANDERSSEN	DATE	3-JUL-01
APR BY	E. ANDERSSEN	DATE	

SER NO. -
DATE ISSD -
DATE REQD -
US ATLAS SILICON SUBSYSTEM (logo)

ERNEST ORLANDO LAWRENCE BERKELEY NATIONAL LABORATORY
UNIVERSITY OF CALIFORNIA - BERKELEY

ATLAS PIXEL DETECTOR
DISK SECTOR, MODULE LOCAL SUPPORT
Bare Sector Final Machining

MICROFILMED:	DWG. TYPE	SHOWN ON	SCALE: 1/1	DO NOT SCALE PRINTS
	ASSEM		SHEET 1 OF 1	
PATENT CLEAR:	DESIGN ACCT. NO.	CATEGORY CODE	DWG. NO.	SIZE / REV.
	P1AP11	AP6110	21F4143	1

Dwg. File: 21F414 Model File: 21F414

DWG. NO. 21F4143 SIZE REV. 1 SH. 1

Rev. 1/02/001 ATLAS

ITEM	PART NO	REQD	DESCRIPTION	MATERIAL
2	21F410	1	BARE SECTOR BODY ASSEMBLY	-
1	21F360	3	T-WASHER, SECTOR MOUNT	VICTREX PEEK

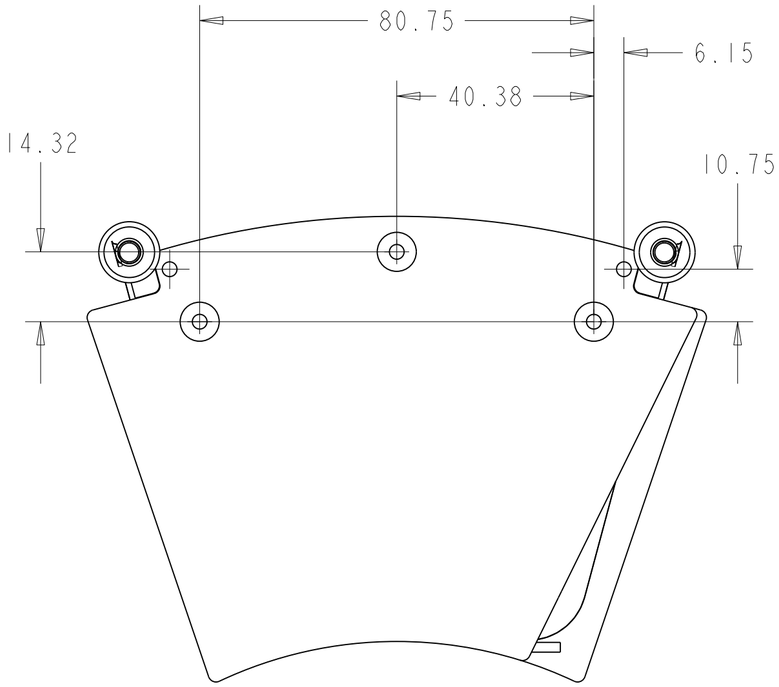

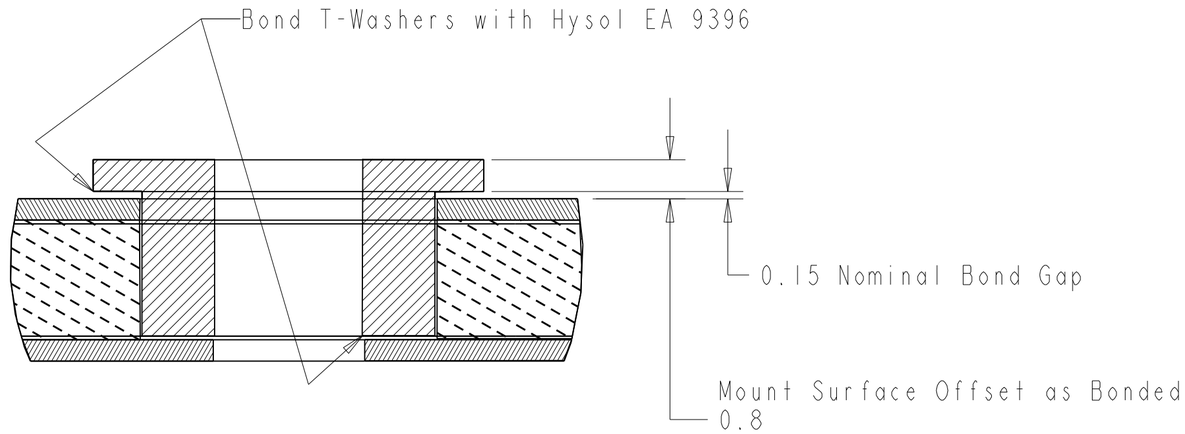

DETAIL T-WASHER INSTALLATION
SCALE 10.000

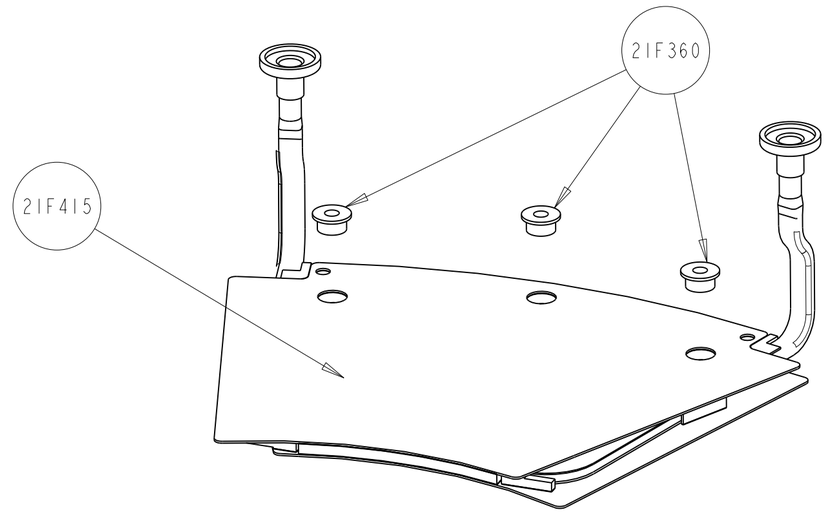

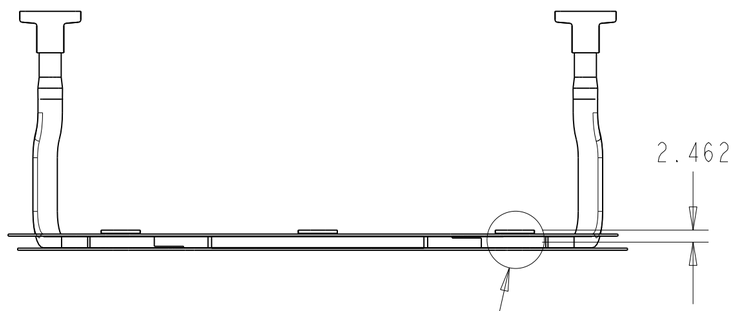

SEE DETAIL T-WASHER INSTALLATION

REV	DWG	CHK	ZONE	DATE	CHANGES

UNLESS OTHERWISE SPECIFIED

TOLERANCES			
	X.X ± 0.1	FRAC. ± 1/64	
	X.XX ± 0.01	Angles ± 0.50°	
	X.XXX ± 0.001	FINISH 125 √(µin)	

DO NOT SCALE PRINT

THREADS ARE CLASS 2
CHAMFER ENDS OF ALL SCREW TREADS 30°
CUT ROUND, 1.5 THREAD RELIEF ON MACHINED THREADS
BREAK EDGES .016 MAX. ON MACHINED WORK
REMOVE BURRS, WELD SPLATTER & LOOSE SCALE
IN ACCORDANCE WITH ASME Y14.5M & B46.1

SHOP ORDERS

ACCT NO.	See J.O.	NO. REQD 60	SER NO. -
DEL TO	Jon Wirth		DATE ISSD -
SURFACE TREATMT			DATE REQD -
IDENT METHOD	TAG		
PROJECT NUMBER	ATL-IP-ED-0029		US ATLAS SILICON SUBSYSTEM (logo)
PROJECT NAME	US ATLAS SILICON	SUBSYSTEM	
DWG BY	D. UKEN		DATE 05-Jul-01
CHK BY	E. ANDERSSEN		DATE 3-JUL-01
APR BY	E. ANDERSSEN		DATE

ERNEST ORLANDO LAWRENCE
BERKELEY NATIONAL LABORATORY
UNIVERSITY OF CALIFORNIA - BERKELEY

ATLAS PIXEL DETECTOR
DISK SECTOR, MODULE LOCAL SUPPORT
Bare Sector Final Assembly

MICROFILMED:	DWG. TYPE	SHOWN ON	SCALE: 1.000	DO NOT SCALE PRINTS
	ASSEM		SHEET 1 OF 1	
PATENT CLEAR:	DESIGN ACCT. NO.	CATEGORY CODE	DWG. NO. 21F4153	SIZE / REV. 1
	PIAP11	AP6110		

DWG. NO. 21F4153 SIZE REV. 1 SH. 1

Dwg. File: 21F415 Model File: 21F415

DWG. NO.	SIZE	REV.	SH.
21F3601		1	1

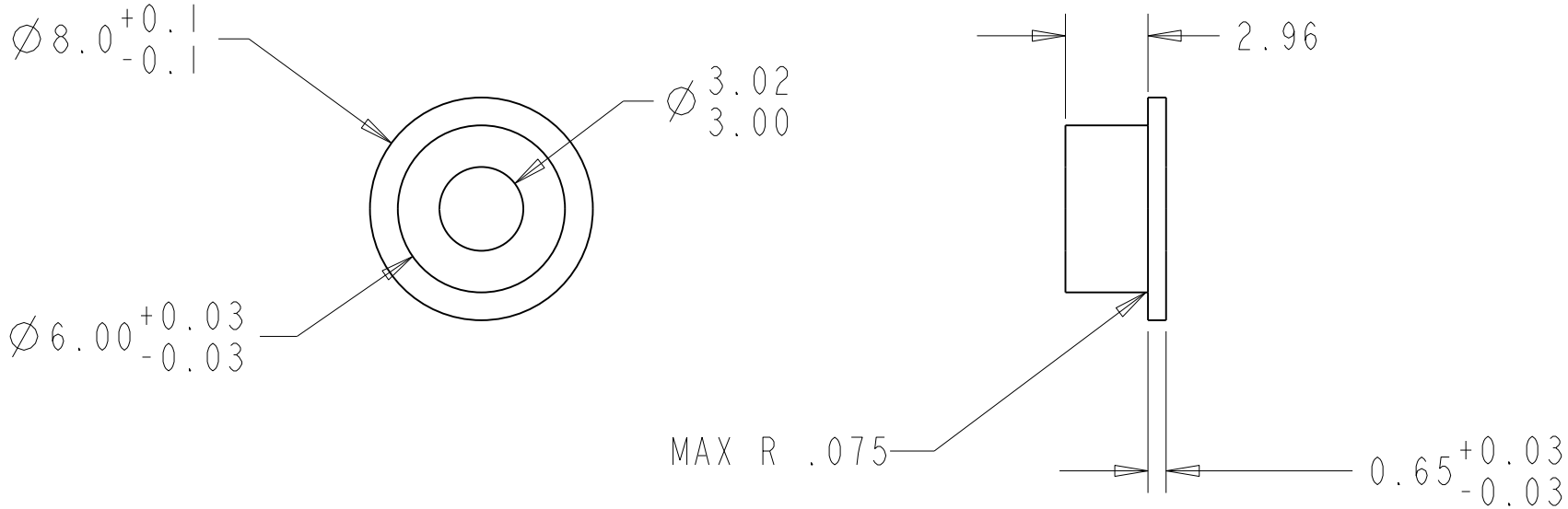

REV	DWG	CHK	DATE	CHANGES	DESCRIPTION	VICTREX PEEK MATERIAL

UNLESS OTHERWISE SPECIFIED

TOLERANCES		
X.X ±0.1	FRAC. ±1/64	
X.XX ±0.03	Angles ±1.00°	
X.XXX ±0.010	FINISH 125 √(μin)	

DO NOT SCALE PRINT

THREADS ARE CLASS 2
CHAMFER ENDS OF ALL SCREW TREADS 30°
CUT ROUND, 1.5 THREAD RELIEF ON MACHINED THREADS
BREAK EDGES .016 MAX. ON MACHINED WORK
REMOVE BURRS, WELD SPLATTER & LOOSE SCALE
IN ACCORDANCE WITH ASME Y14.5M & B46.1

SHOP ORDERS

ACCT NO.	SEE J.O	NO. REQD 180	DATE ISSD -
DEL TO	JS WIRTH		DATE REQD -
SURFACE TREATMT	CHROMIC ETCH		
IDENT METHOD	TAG		
PROJECT NUMBER	ATL-IP-ED-0030		
PROJECT NAME	US ATLAS SILICON SUBSYSTEM		
DWG BY	D UKEN	DATE	18-Feb-01
CHK BY	J WIRTH	DATE	18-FEB-01
APR BY	E ANDERSSEN	DATE	

SER NO. -

ERNEST ORLANDO LAWRENCE BERKELEY NATIONAL LABORATORY
UNIVERSITY OF CALIFORNIA - BERKELEY

ATLAS PIXEL DETECTOR
DISK SECTOR, MODULE LOCAL SUPPORT
T-WASHER, SECTOR MOUNT

MICROFILMED:	DWG. TYPE	SHOWN ON	SCALE: 4.000	DO NOT SCALE PRINTS
	PART		SHEET 1 OF 1	
PATENT CLEAR:	DESIGN ACCT. NO.	CATEGORY CODE	DWG. NO. 21F3601	SIZE / REV. 1
	PIAP-11	AP6110		

Rev. 1/8/2001 ATLAS

Dwg. File: 21F360 Model File: 21F360

ITEM	PART NO	REQD	DESCRIPTION	MATERIAL
3	21F407		NON-MOUNTSIDE SECTOR FACING W/C-E PLACEMENT	-
2	21F471		Sector Cooling Tube with CGL 7018 LV-XF	
1	21F405		FINISHED MOUNTSIDE FACING WITH C-E PLACEMENT	-

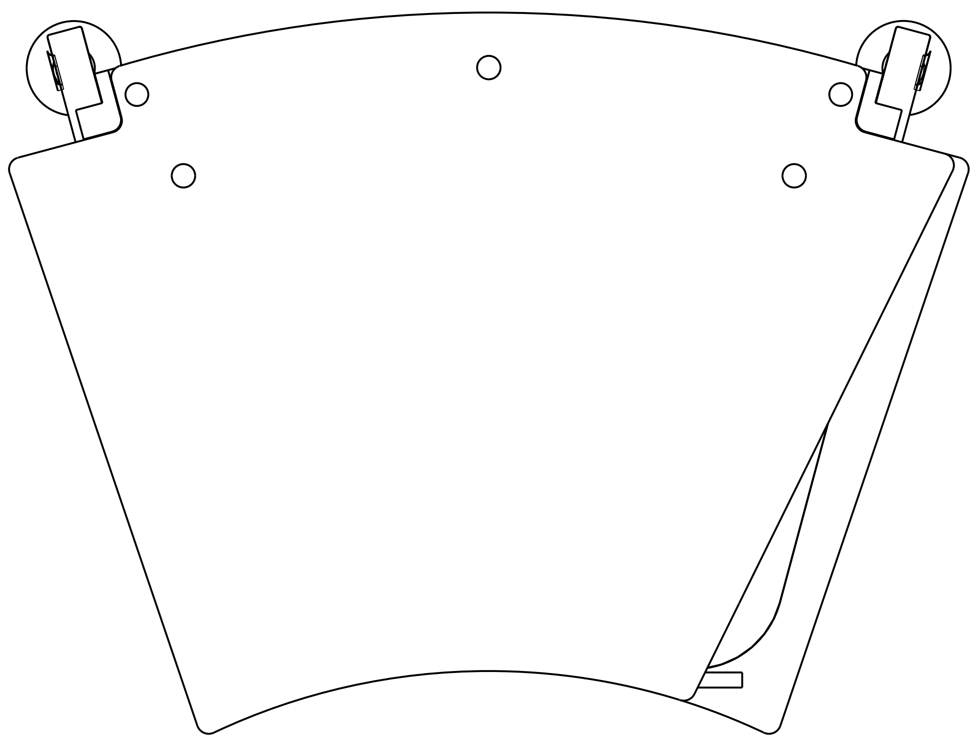

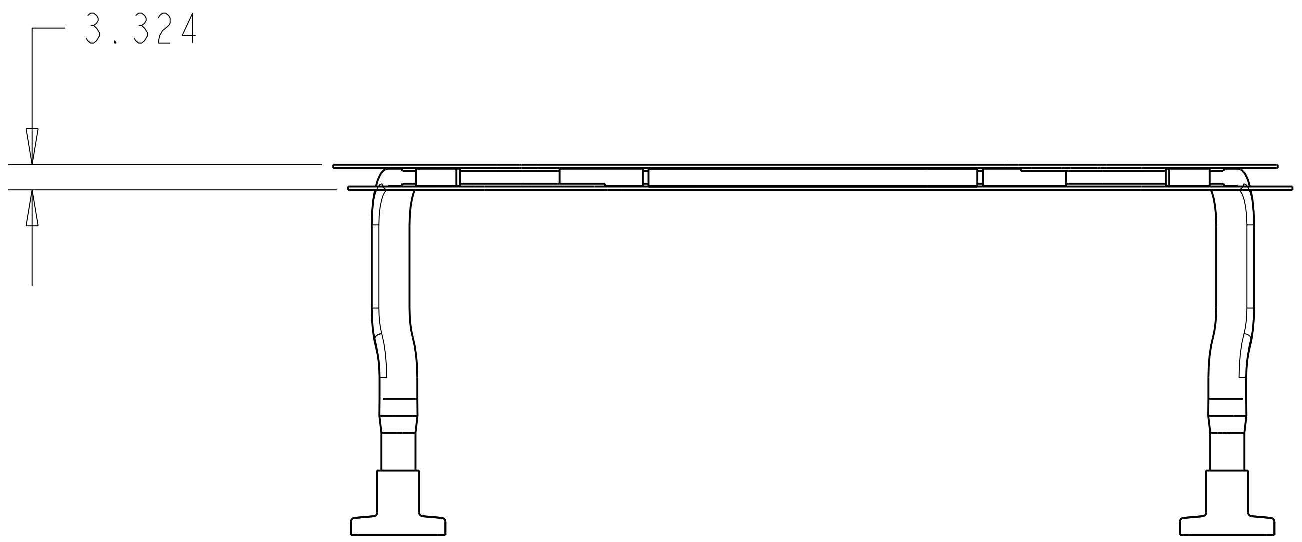

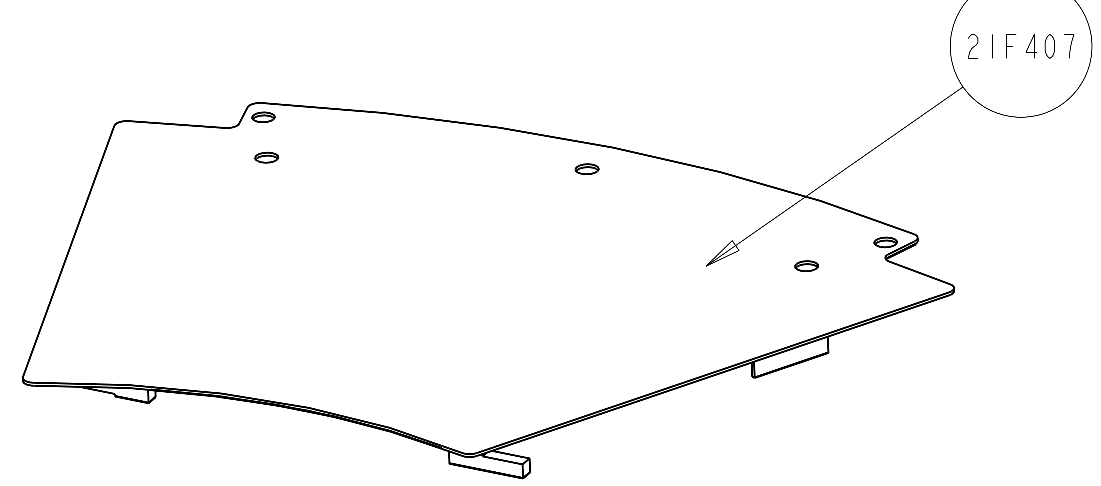

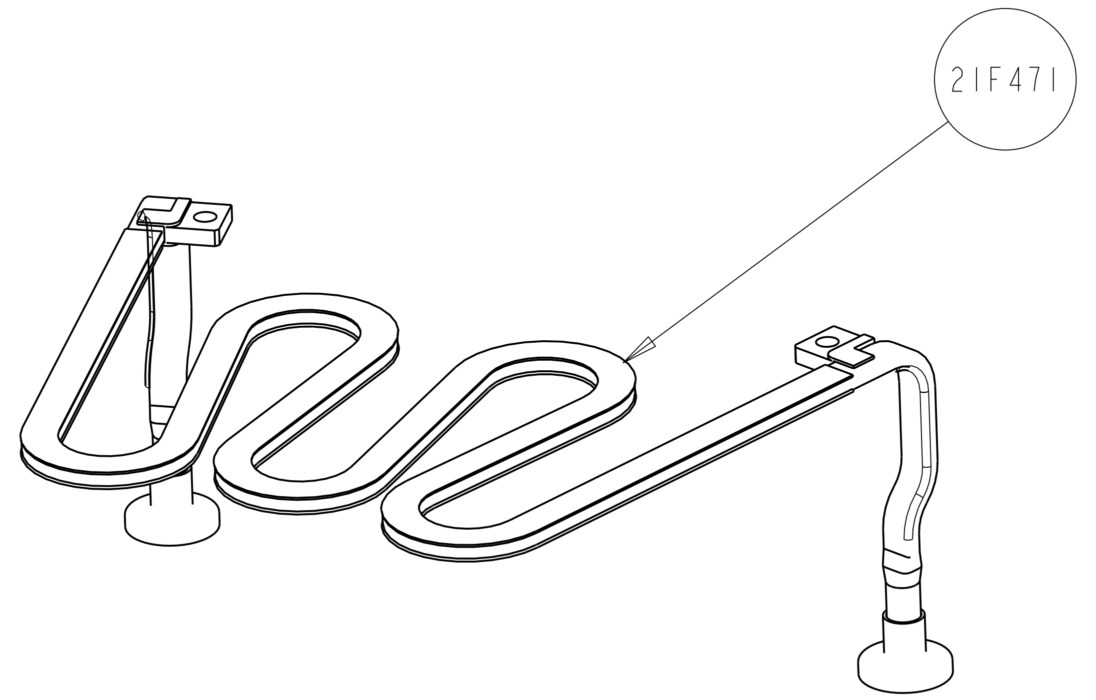

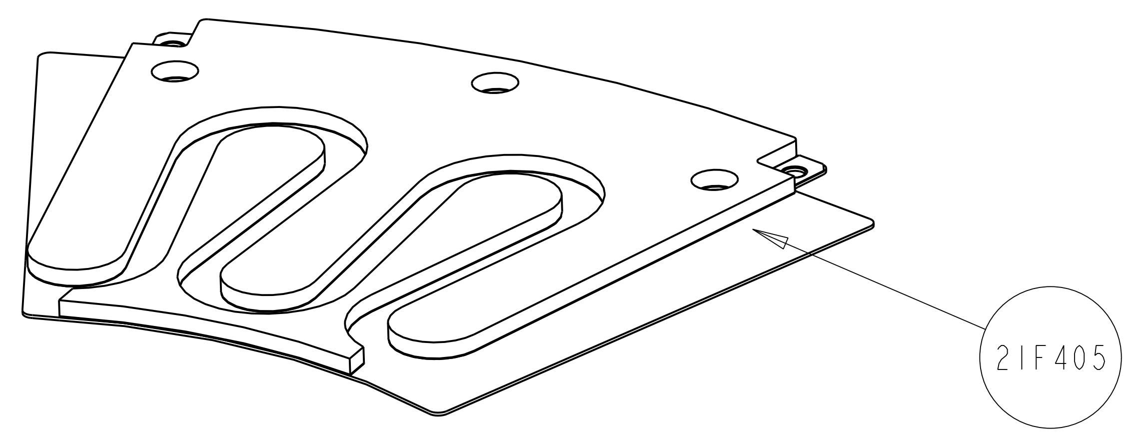

REV	DWG	CHK	ZONE	DATE	CHANGES

UNLESS OTHERWISE SPECIFIED

TOLERANCES		
	X.X ± 0.5	FRAC. ± 1/64
	X.XX ± 0.05	Angles ± 1.00°
	X.XXX ± 0.010	FINISH 125

DO NOT SCALE PRINT

THREADS ARE CLASS 2
CHAMFER ENDS OF ALL SCREW TREADS 30°
CUT ROUND, 1.5 THREAD RELIEF ON MACHINED THREADS
BREAK EDGES .016 MAX. ON MACHINED WORK
REMOVE BURRS, WELD SPLATTER & LOOSE SCALE
IN ACCORDANCE WITH ASME Y14.5M & B46.1

SHOP ORDERS

ACCT NO.	See J.O.	NO. REQD	60
DEL TO	Jon Wirth		
SURFACE TREATMT	-		
IDENT METHOD	TAG		
PROJECT NUMBER	ATL-IP-ED-0031		
PROJECT NAME	US ATLAS SILICON SUBSYSTEM		
DWG BY	D UKEN	DATE	19-JUN-01
CHK BY	J WIRTH	DATE	3-JUL-01
APR BY	E ANDERSSEN	DATE	

SER NO. -
DATE ISSD -
DATE REQD -

US ATLAS SILICON SUBSYSTEM (logo)

ERNEST ORLANDO LAWRENCE BERKELEY NATIONAL LABORATORY
UNIVERSITY OF CALIFORNIA - BERKELEY

ATLAS PIXEL DETECTOR
DISK SECTOR, MODULE LOCAL SUPPORT
BARE SECTOR BODY ASSEMBLY

MICROFILMED:	DWG. TYPE	SHOWN ON	SCALE: 1.000	DO NOT SCALE PRINTS
	ASSEM	21F415	SHEET 1 OF 1	
PATENT CLEAR:	DESIGN ACCT. NO.	CATEGORY CODE	DWG. NO.	SIZE / REV.
	PIAP-11	AP6110	21F4103	1

DWG. NO. 21F4103 SIZE REV. 1 SH. 1

Rev. 1/8/2001 ATLAS

Dwg. File: 21F410 Model File: 21F410

ITEM	PART NO	REQD	DESCRIPTION	MATERIAL
4	21F416-3		SECTOR FOAM COMPLETE	-
3	21f426		CYANATE ESTER FOR STRAIN RELIEFS	BRYTE E01189-2M
2	21f425		CYANATE ESTER FOR FOAM	BRYTE E01189-2M
1	21F354		FACING, SECTOR MOUNTSIDE	P30 CARBON-CARBON

INSTALL CYANATE-ESTER FILM FOR COOLING TUBE STRAIN RELIEFS

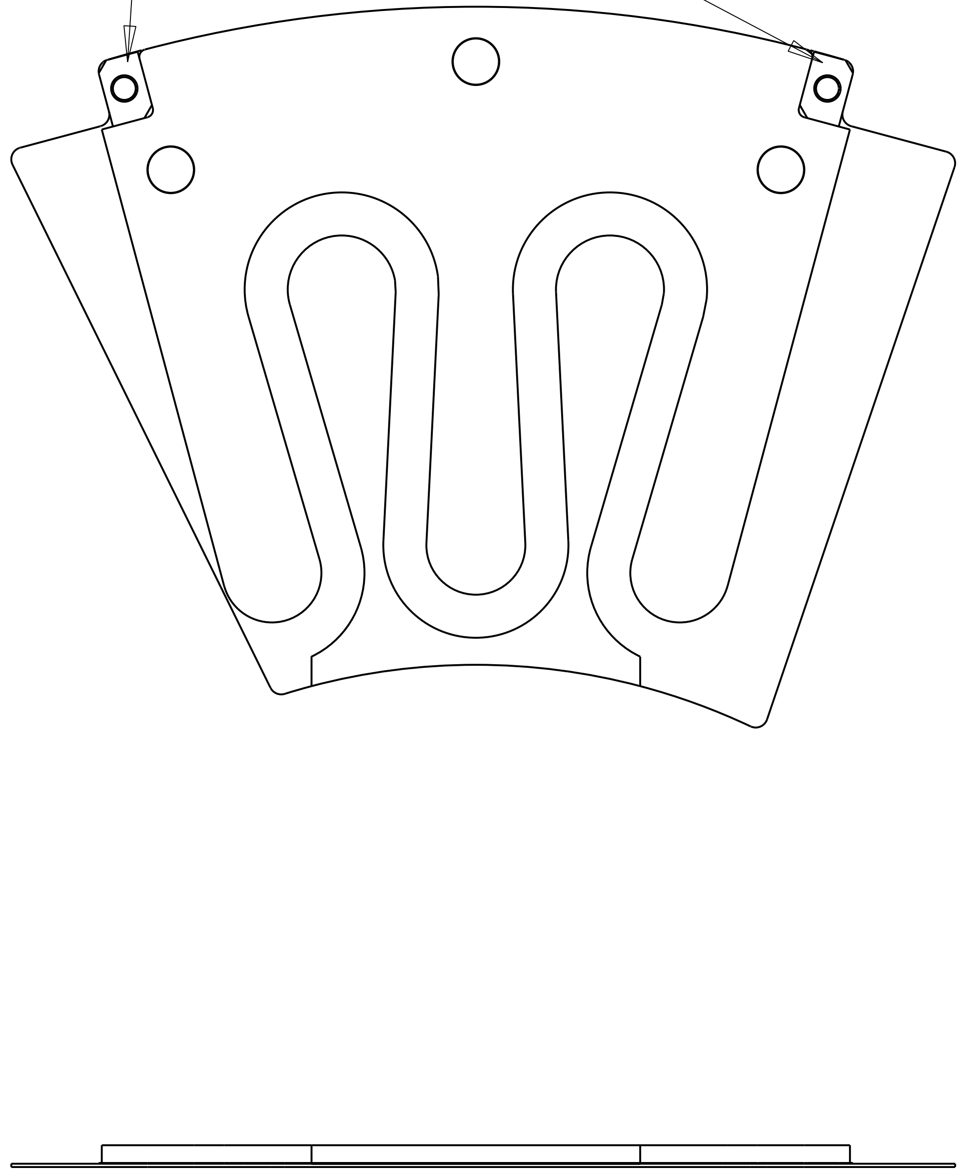

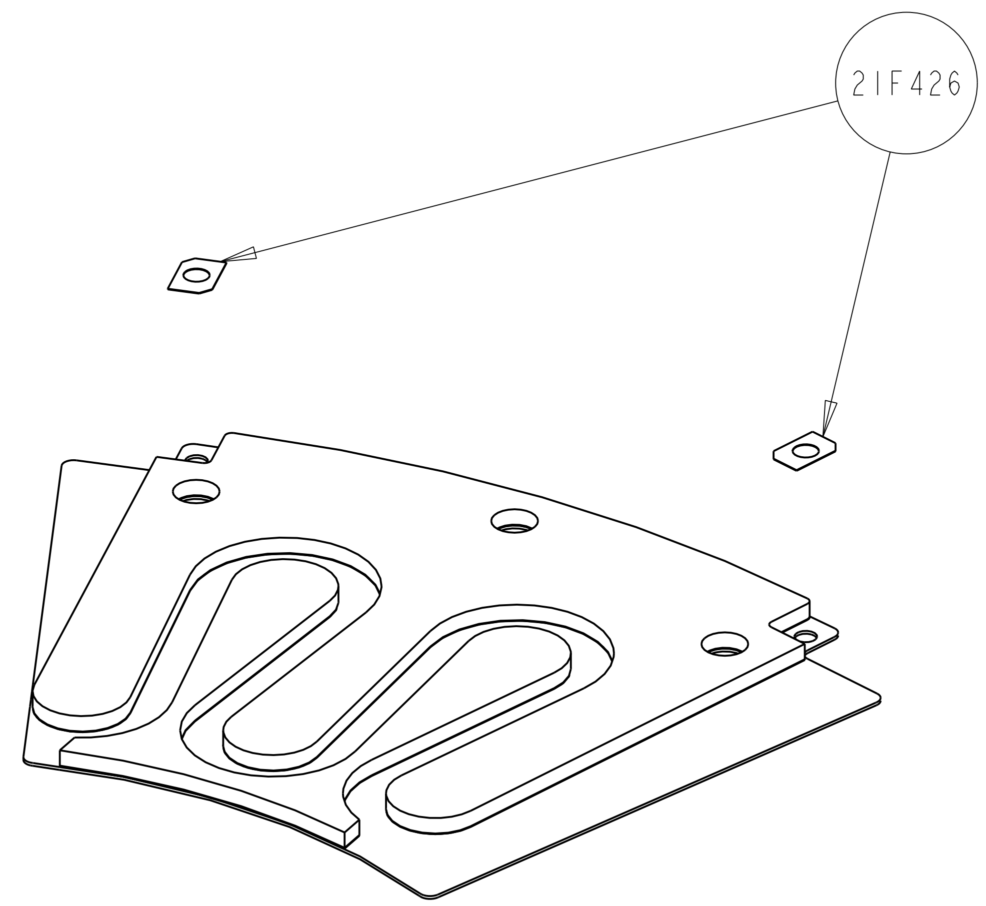

REV	DWG	CHK	ZONE	DATE	CHANGES

UNLESS OTHERWISE SPECIFIED

TOLERANCES		
	X.X ± 0.5	FRAC. ± 1/64
	X.XX ± 0.05	Angles ± 1.00°
	X.XXX ± 0.010	FINISH 125/(μin)

DO NOT SCALE PRINT

THREADS ARE CLASS 2
CHAMFER ENDS OF ALL SCREW THREADS 30°
CUT ROUND, 1.5 THREAD RELIEF ON MACHINED THREADS
BREAK EDGES .016 MAX. ON MACHINED WORK
REMOVE BURRS, WELD SPLATTER & LOOSE SCALE
IN ACCORDANCE WITH ASME Y14.5M & B46.1

SHOP ORDERS		SER NO. -
ACCT NO. See J.O.	NO. REQD 60	DATE ISSD -
DEL TO Jon Wirth		DATE REQD -
SURFACE TREATMT -		
IDENT METHOD TAG		
PROJECT NUMBER ATL-IP-ED-0044		US ATLAS SILICON SUBSYSTEM (logo)
PROJECT NAME US ATLAS SILICON SUBSYSTEM		
DWG BY J WIRTH		DATE 20-Jun-01
CHK BY E ANDERSSEN		DATE 2-Jul-01
APR BY E ANDERSSEN		DATE

ERNEST ORLANDO LAWRENCE BERKELEY NATIONAL LABORATORY
UNIVERSITY OF CALIFORNIA - BERKELEY

ATLAS PIXEL DETECTOR
DISK SECTOR, MODULE LOCAL SUPPORT
FINISHED MOUNTSIDE FACING WITH C-E PLACEMENT

MICROFILMED:	DWG. TYPE ASSEM	SHOWN ON	SCALE: 1.000	DO NOT SCALE PRINTS
			SHEET 1 OF 1	
PATENT CLEAR:	DESIGN ACCT. NO. PIAP-11	CATEGORY CODE AP6110	DWG. NO. 21F4053 SIZE	REV. 1

DWG. NO. 21F4053 SIZE REV. 1 SH. 1

Rev. 1/8/2001 ATLAS

Dwg. File: 21F405 Model File: 21F405

D C B A

ITEM	PART NO	REQD	DESCRIPTION	MATERIAL
9	21f426	1	CYANATE ESTER FOR STRAIN RELIEFS	BRYTE E01189-2M
8	21f425	1	CYANATE ESTER FOR FOAM	BRYTE E01189-2M
7	21F424	1	Hardpoint_Beam/Cyanate-Ester_Assembly_Long	
6	21F423	1	Hardpoint_Beam/Cyanate-Ester_Assembly_Short	
5	21f421	1	Cyanate_Ester_Long_for_Hardpoint_Beam	Bryte E011899-2MU
4	21f420	1	Cyanate_Ester_Short_for_Hardpoint_Beam	Bryte E011899-2MU
3	21f418	2	Wedge with cyanate ester	
2	21f417	2	Cyanate Ester for Wedge	Bryte E011899-2MU
1	21F355	1	FACING, SECTOR NON-MOUNTSIDE	P30 CARBON-CARBON

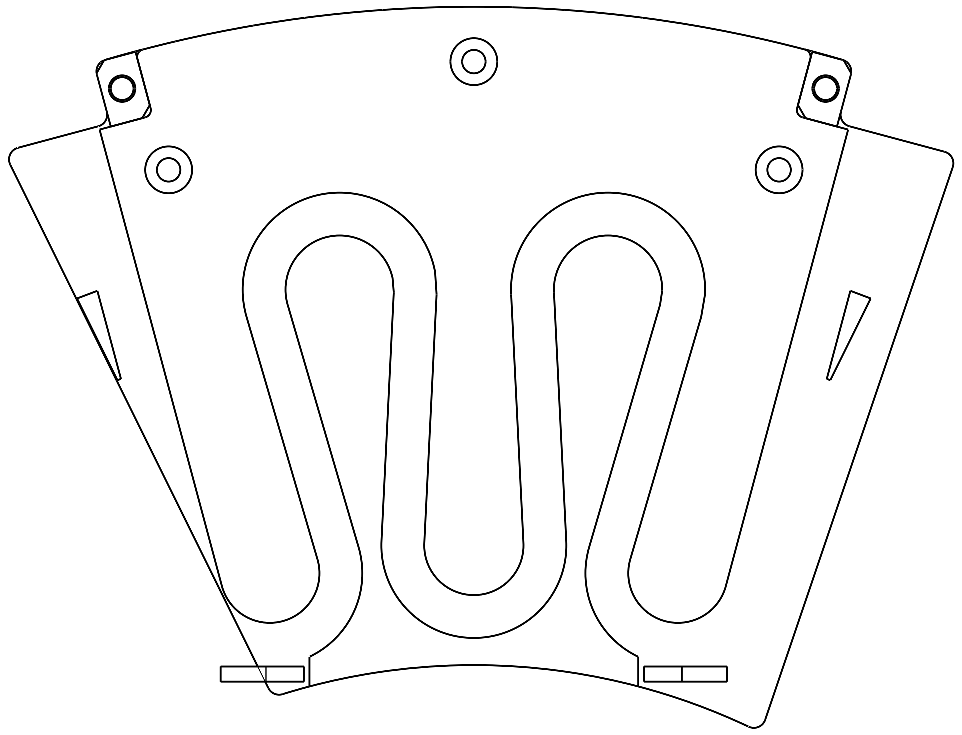

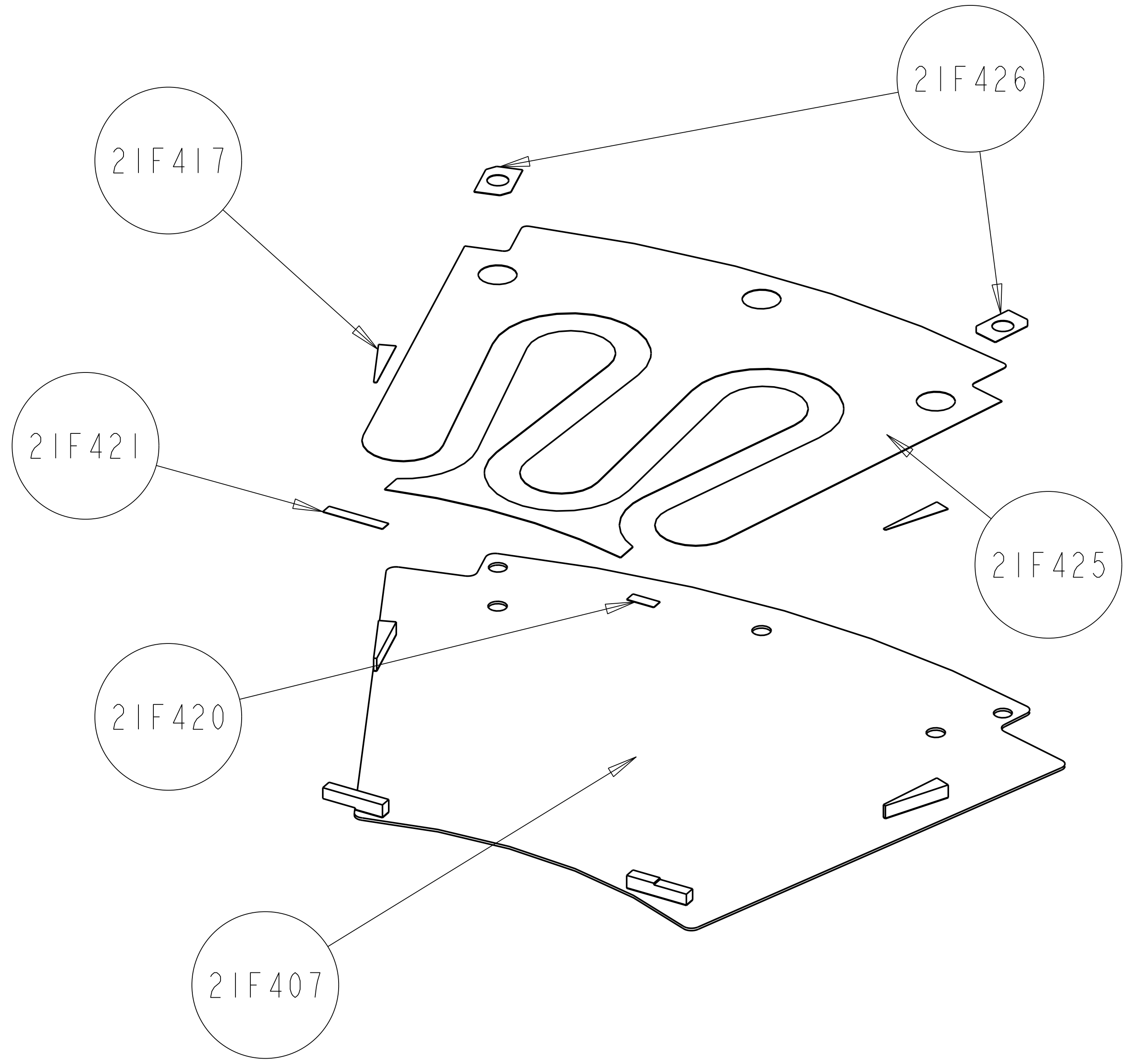

NOTE: INSTALL CYANATE-ESTER FILM FOR BONDING FOAM, STRAINRELIEFS, AND HARDPOINTS TO MOUNTSIDE SECTOR FACING ASSEMBLY

REV	DWG	CHK	ZONE	DATE	CHANGES

UNLESS OTHERWISE SPECIFIED

TOLERANCES: X.X ± 0.5 | FRAC. ± 1/64 | X.XX ± 0.05 | Angles ± 1.00° | X.XXX ± 0.010 | FINISH 125 (µin)

DO NOT SCALE PRINT

THREADS ARE CLASS 2
CHAMFER ENDS OF ALL SCREW THREADS 30°
CUT ROUND, 1.5 THREAD RELIEF ON MACHINED THREADS
BREAK EDGES .016 MAX. ON MACHINED WORK
REMOVE BURRS, WELD SPLATTER & LOOSE SCALE
IN ACCORDANCE WITH ASME Y14.5M & B46.1

SHOP ORDERS
SER NO. -
ACCT NO. See J.O. | NO. REQD 60 | DATE ISSD -
DEL TO Jon Wirth | DATE REQD -
SURFACE TREATMT -
IDENT METHOD TAG
PROJECT NUMBER ATL-IP-ED-0045 | US ATLAS SILICON SUBSYSTEM (logo)
PROJECT NAME US ATLAS SILICON SUBSYSTEM
DWG BY J WIRTH | DATE 19-JUN-01
CHK BY E ANDERSSEN | DATE 22-JUN-01
APR BY E ANDERSSEN | DATE

ERNEST ORLANDO LAWRENCE
BERKELEY NATIONAL LABORATORY
UNIVERSITY OF CALIFORNIA - BERKELEY

ATLAS PIXEL DETECTOR
DISK SECTOR, MODULE LOCAL SUPPORT
NON-MOUNTSIDE SECTOR FACING W/C-E PLACEMENT

MICROFILMED: | DWG. TYPE ASSEM | SHOWN ON 21f410 | SCALE: 1.000 | DO NOT SCALE PRINTS
SHEET 1 OF 1
PATENT CLEAR: | DESIGN ACCT. NO. PIAP-11 | CATEGORY CODE AP6110 | DWG. NO. 21F4073 | SIZE | REV. 1

DWG. NO. 21F4073 SIZE REV. 1 SH. 1

Dwg File: 21F407 Model File: 21F407

DESCRIPTION	MATERIAL	MAT. LOCATION
	BRYTE E01189-2M	-

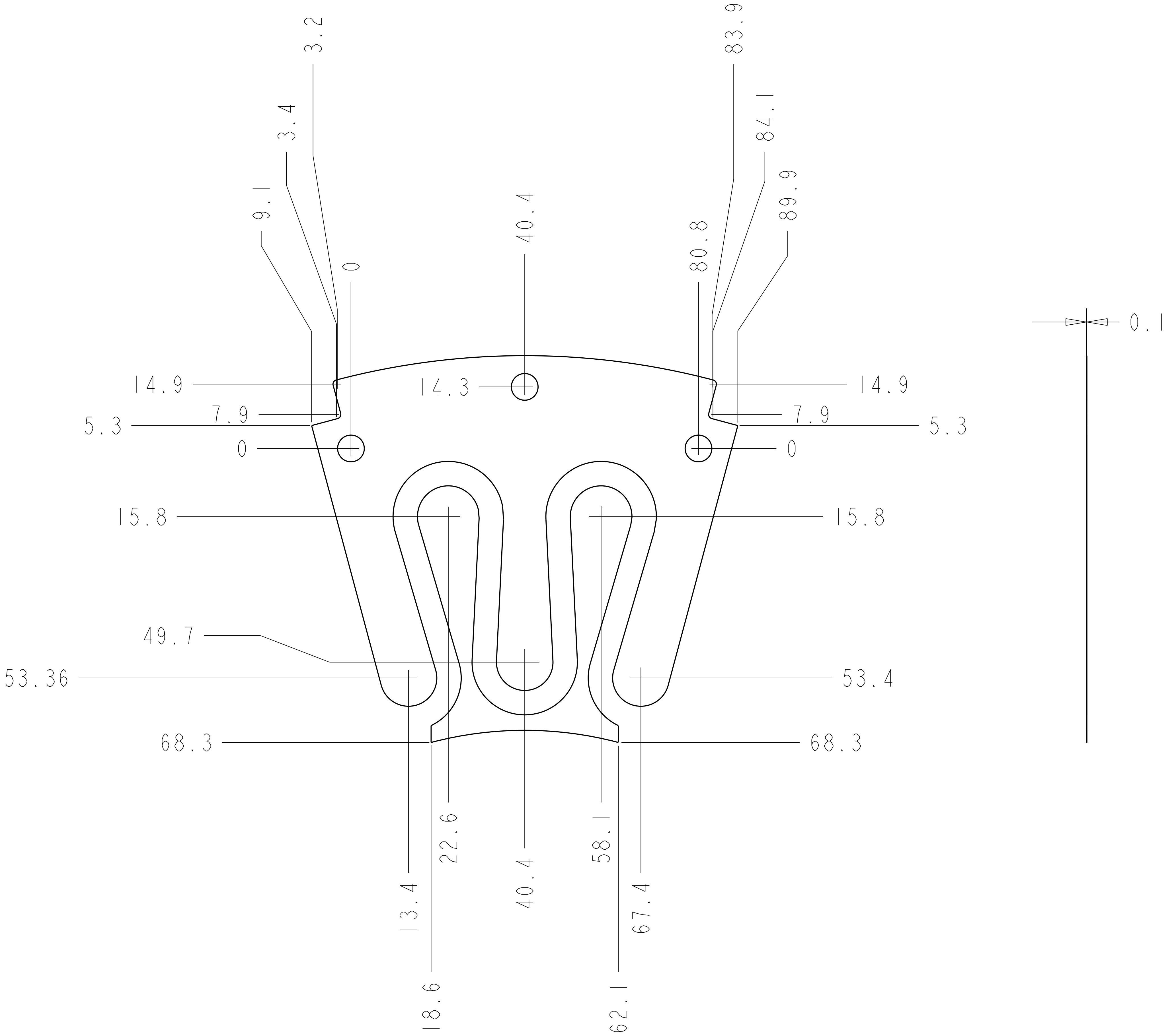

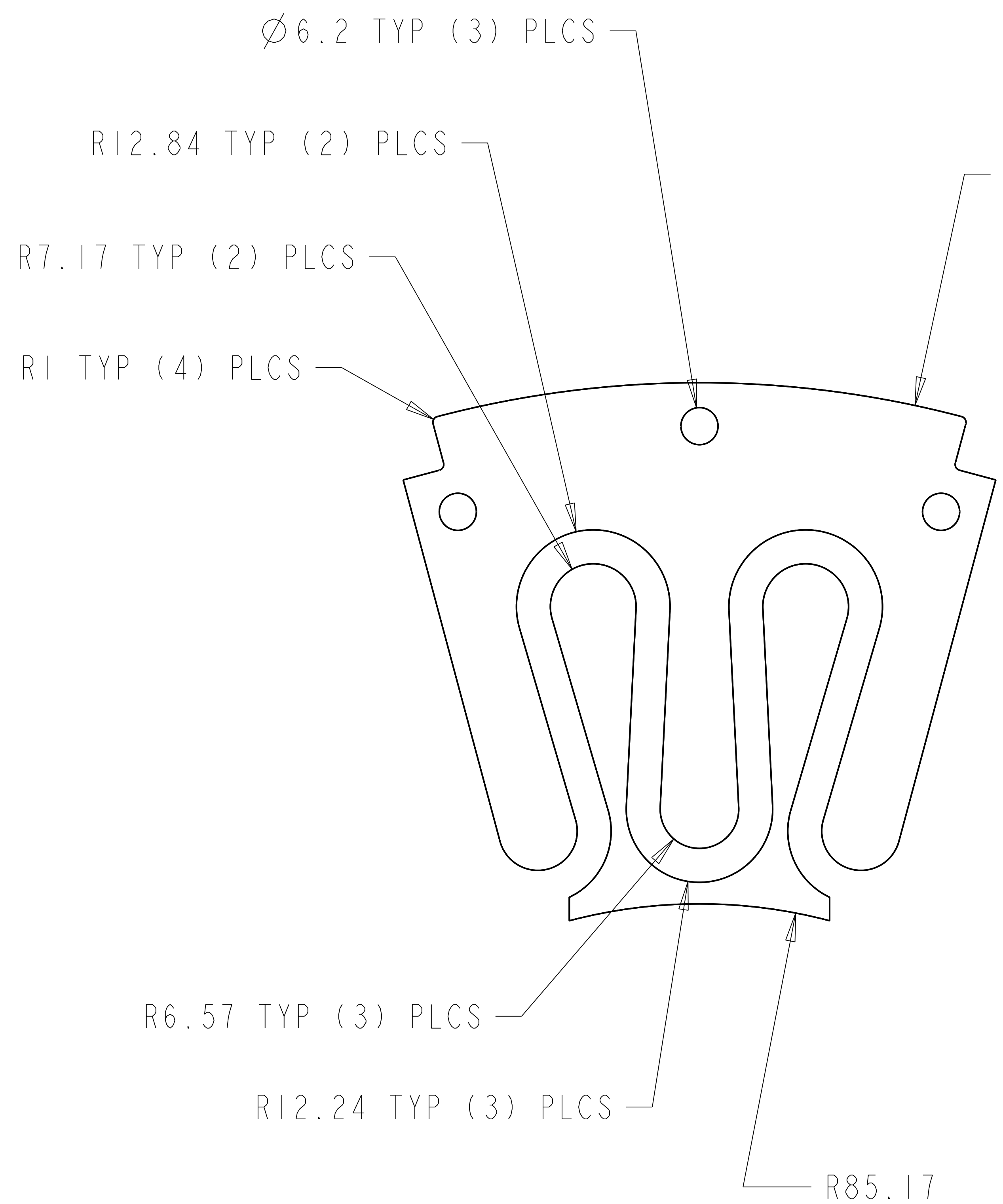

REV	DWG	CHK	ZONE	DATE	CHANGES

UNLESS OTHERWISE SPECIFIED

TOLERANCES: X.X ± 0.1 | FRAC. ± 1/64 | X.XX ± 0.01 | Angles ± 0.50° | X.XXX ± 0.001 | FINISH 125 (μin)

DO NOT SCALE PRINT

THREADS ARE CLASS 2
CHAMFER ENDS OF ALL SCREW TREADS 30°
CUT ROUND, 1.5 THREAD RELIEF ON MACHINED THREADS
BREAK EDGES .016 MAX. ON MACHINED WORK
REMOVE BURRS, WELD SPLATTER & LOOSE SCALE
IN ACCORDANCE WITH ASME Y14.5M & B46.1

SHOP ORDERS		
ACCT NO. See J.O.	NO. REQD 60	SER NO. -
DEL TO Jon Wirth		DATE ISSD -
SURFACE TREATMT		DATE REQD -
IDENT METHOD TAG		
PROJECT NUMBER ATL-IP-ED-0032		US ATLAS SILICON SUBSYSTEM (logo)
PROJECT NAME US ATLAS SILICON SUBSYSTEM		
DWG BY D UKEN		DATE 19-JUN-01
CHK BY J WIRTH		DATE 29-JUN-01
APR BY E ANDERSSEN		DATE

ERNEST ORLANDO LAWRENCE BERKELEY NATIONAL LABORATORY
UNIVERSITY OF CALIFORNIA - BERKELEY

ATLAS PIXEL DETECTOR
DISK SECTOR, MODULE LOCAL SUPPORT
CYANATE ESTER FOR FOAM

MICROFILMED:	DWG. TYPE PART	SHOWN ON 21F350	SCALE: 1.000	DO NOT SCALE PRINTS
PATENT CLEAR:	DESIGN ACCT. NO. SEE J.O.	CATEGORY CODE AP6110	DWG. NO. 21f4253 SIZE	REV. 1

SHEET 1 OF 1

DWG. NO. 21f4253 SIZE REV. 1 SH. 1

Rev. 1/8/2001 ATLAS

Dwg. File: 21F425 Model File: 21F425

ITEM	PART NO	REQD	DESCRIPTION	MATERIAL
4	21F424	1	Hardpoint_Beam/Cyanate-Ester_Assembly_Long	
3	21F423	1	Hardpoint_Beam/Cyanate-Ester_Assembly_Short	
2	21f418	2	Wedge with cyanate ester	
1	21F355	1	FACING, SECTOR NON-MOUNTSIDE	P30 CARBON-CARBON

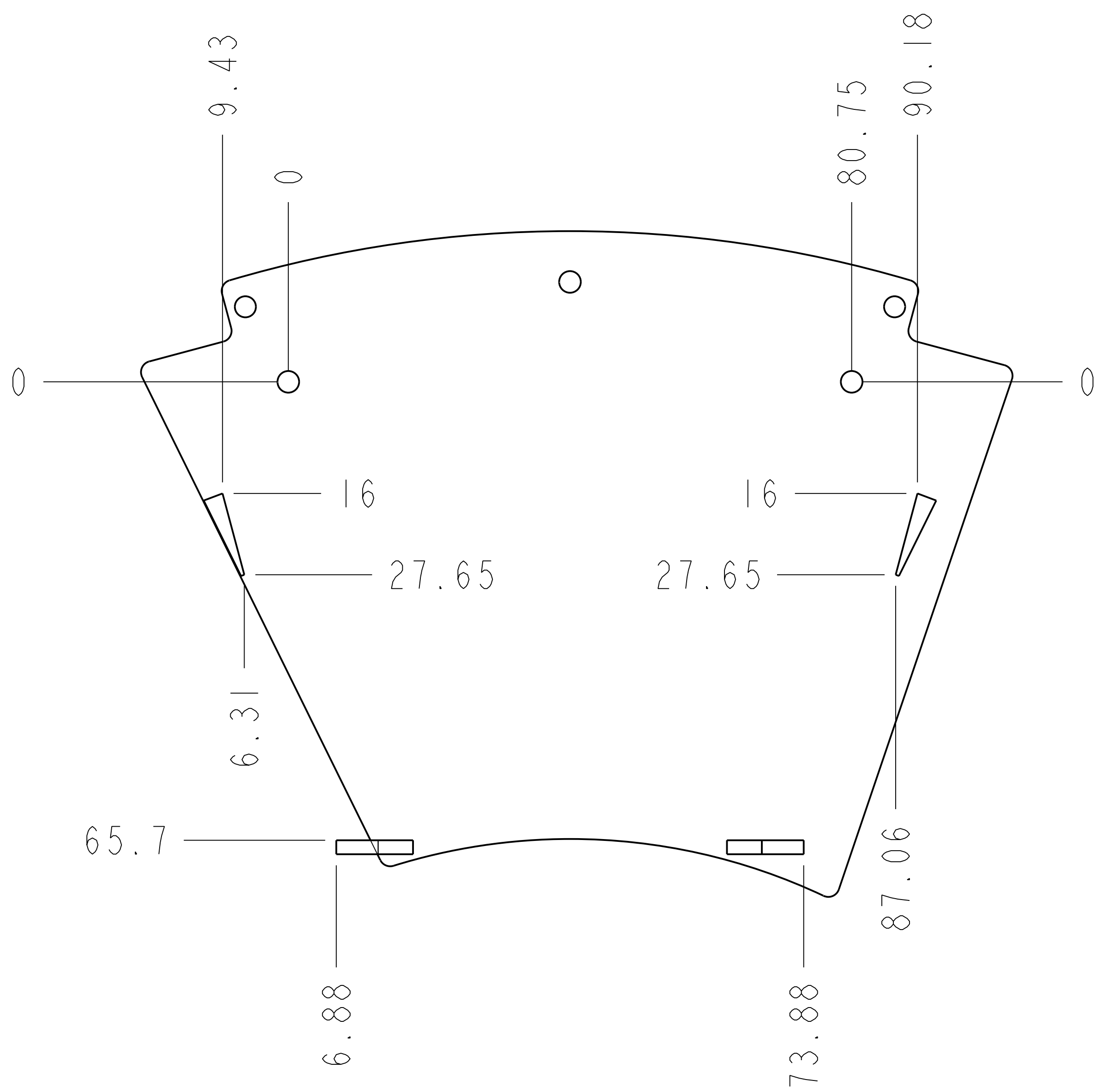

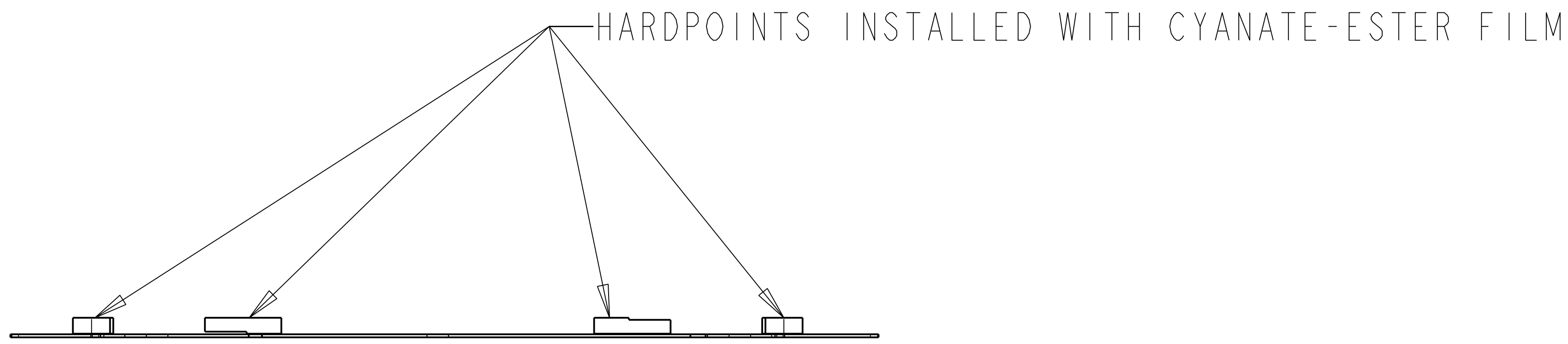

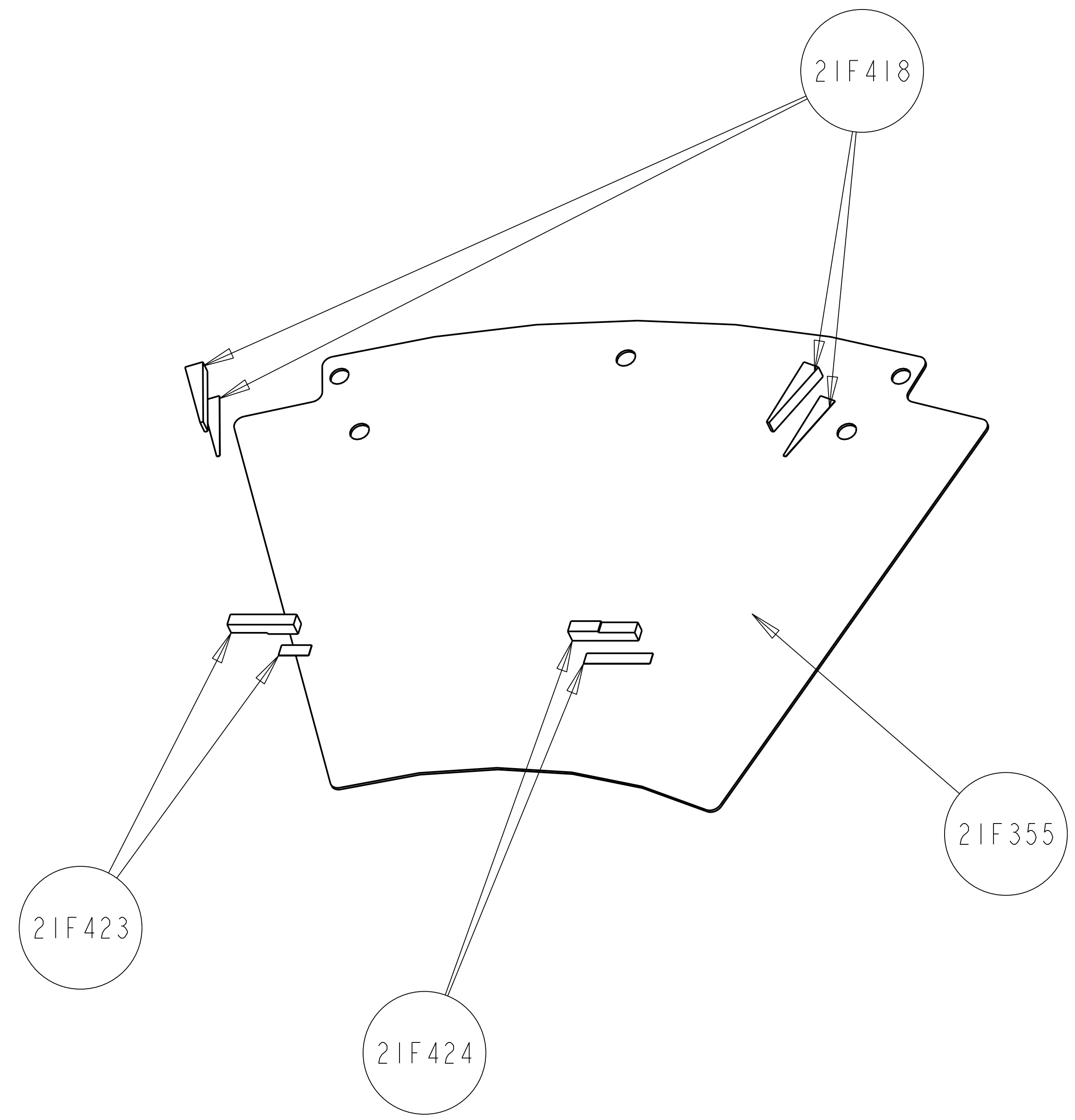

REV	DWG	CHK	ZONE	DATE	CHANGES

UNLESS OTHERWISE SPECIFIED

TOLERANCES: X.X ± 0.5 | FRAC. ± 1/64 | X.XX ± 0.05 | Angles ± 1.00° | X.XXX ± 0.010 | FINISH 125

DO NOT SCALE PRINT

THREADS ARE CLASS 2
CHAMFER ENDS OF ALL SCREW THREADS 30°
CUT ROUND, 1.5 THREAD RELIEF ON MACHINED THREADS
BREAK EDGES .016 MAX. ON MACHINED WORK
REMOVE BURRS, WELD SPLATTER & LOOSE SCALE
IN ACCORDANCE WITH ASME Y14.5M & B46.1

SHOP ORDERS

SER NO. -
ACCT NO. See J.O. | NO. REQD 60 | DATE ISSD -
DEL TO Jon Wirth | DATE REQD -
SURFACE TREATMT -
IDENT METHOD TAG
PROJECT NUMBER ATL-IP-ED-0033
US ATLAS SILICON SUBSYSTEM (logo)
PROJECT NAME US ATLAS SILICON SUBSYSTEM
DWG BY J WIRTH | DATE 20-Jun-01
CHK BY E ANDERSSEN | DATE 22-JUN-01
APR BY E ANDERSSEN | DATE

ERNEST ORLANDO LAWRENCE BERKELEY NATIONAL LABORATORY
UNIVERSITY OF CALIFORNIA - BERKELEY

ATLAS PIXEL DETECTOR
DISK SECTOR, MODULE LOCAL SUPPORT
NON-MOUNTSIDE SECTOR FACING ASSEMBLY

MICROFILMED: | DWG. TYPE ASSEM | SHOWN ON 21f410 | SCALE: 1.000 | DO NOT SCALE PRINTS
SHEET 1 OF 1
PATENT CLEAR: | DESIGN ACCT. NO. PIAP-11 | CATEGORY CODE AP6110 | DWG. NO. 21F4063 | SIZE | REV. 1

DWG. NO. 21F4063 | SIZE | REV. 1 | SH. 1

Dwg. File: 21F406 Model File: 21F406

DESCRIPTION	MATERIAL	MAT. LOCATION
	P30 CARBON-CARBON	-

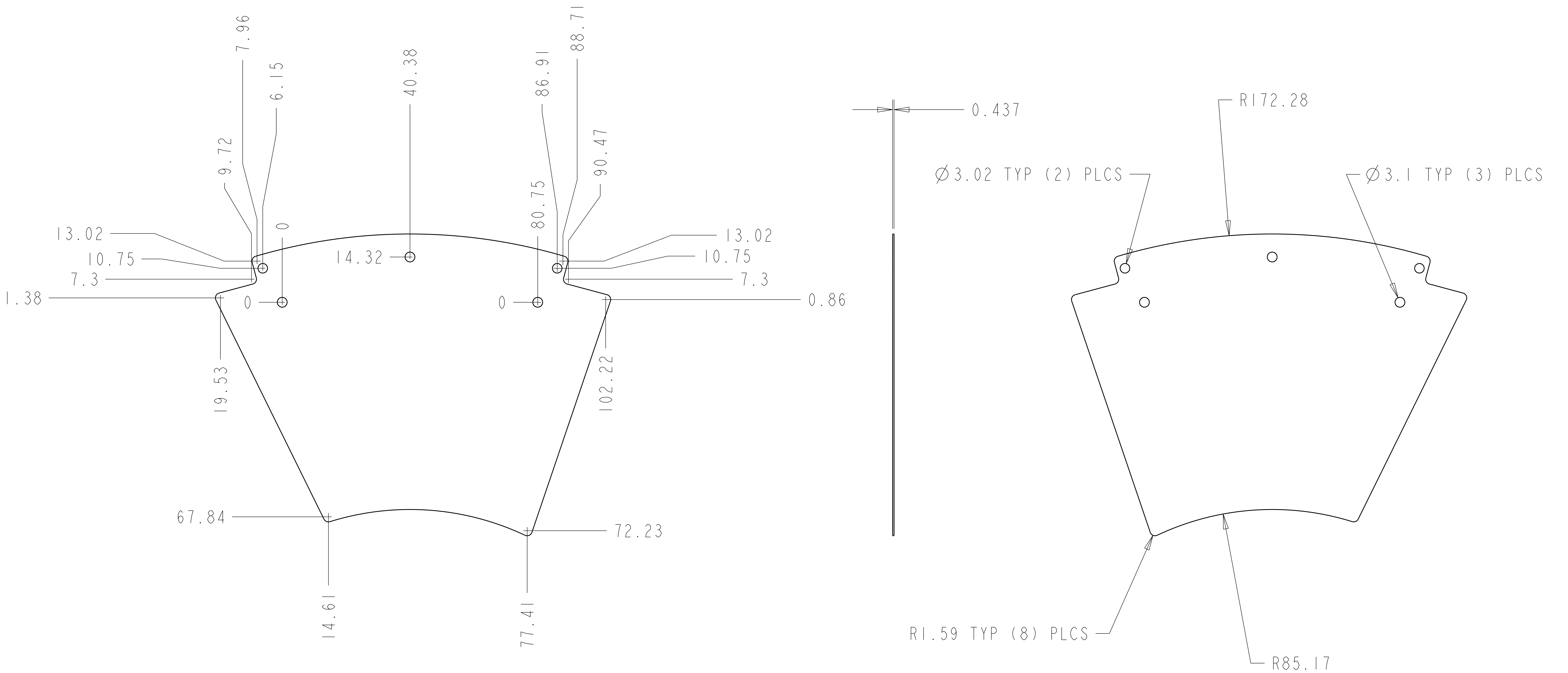

REV	DWG	CHK	ZONE	DATE	CHANGES

UNLESS OTHERWISE SPECIFIED

TOLERANCES		
	X.X ± 0.1	FRAC. ± 1/64
	X.XX ± 0.01	Angles ± 0.50°
	X.XXX ± 0.001	FINISH 125√(μin)

DO NOT SCALE PRINT

THREADS ARE CLASS 2
CHAMFER ENDS OF ALL SCREW TREADS 30°
CUT ROUND, 1.5 THREAD RELIEF ON MACHINED THREADS
BREAK EDGES .016 MAX. ON MACHINED WORK
REMOVE BURRS, WELD SPLATTER & LOOSE SCALE
IN ACCORDANCE WITH ASME Y14.5M & B46.1

SHOP ORDERS

ACCT NO. See J.O.	NO. REQD 120	SER NO. -	
DEL TO Jon Wirth		DATE ISSD -	
SURFACE TREATMT		DATE REQD -	
IDENT METHOD TAG			
PROJECT NUMBER ATL-IP-ED-0034		US ATLAS SILICON SUBSYSTEM (logo)	
PROJECT NAME US ATLAS SILICON SUBSYSTEM			
DWG BY D UKEN		DATE 18-FEB-01	
CHK BY J WIRTH		DATE 29-JUN-01	
APR BY E ANDERSSEN		DATE	

ERNEST ORLANDO LAWRENCE BERKELEY NATIONAL LABORATORY
UNIVERSITY OF CALIFORNIA - BERKELEY

ATLAS PIXEL DETECTOR
DISK SECTOR, MODULE LOCAL SUPPORT
FACING, SECTOR NON-MOUNTSIDE

MICROFILMED:	DWG. TYPE: PART	SHOWN ON 21F352	SCALE: 1.000	DO NOT SCALE PRINTS
			SHEET 1 OF 1	
PATENT CLEAR:	DESIGN ACCT. NO. SEE J.O.	CATEGORY CODE AP6110	DWG. NO. 21F3553 SIZE	REV. 1

Rev. 1/8/2001 ATLAS

Dwg. File: 21F355 Model File: 21F355

DWG. NO. 21F3553 SIZE REV. 1 SH. 1

DWG. NO.	SIZE	REV.	SH.
21F3591		1	1

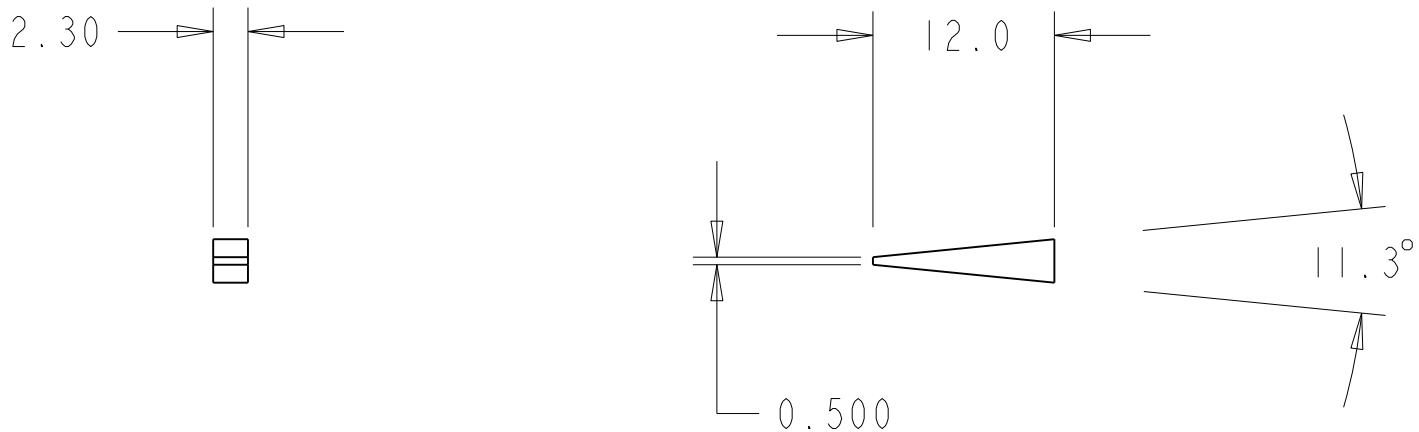

REV	DWG	CHK	DATE	CHANGES	DESCRIPTION	BFG 3D-CC MATERIAL

UNLESS OTHERWISE SPECIFIED

TOLERANCES		
X.X ±0.1	FRAC. ±1/64	
X.XX ±0.01	Angles ±0.50°	
X.XXX ±0.001	FINISH 125 √(μin)	

DO NOT SCALE PRINT

THREADS ARE CLASS 2
CHAMFER ENDS OF ALL SCREW TREADS 30°
CUT ROUND, 1.5 THREAD RELIEF ON MACHINED THREADS
BREAK EDGES .016 MAX. ON MACHINED WORK
REMOVE BURRS, WELD SPLATTER & LOOSE SCALE
IN ACCORDANCE WITH ASME Y14.5M & B46.1

SHOP ORDERS

ACCT NO.	See J.O.	NO. REQD 120	DATE ISSD -
DEL TO	Jon Wirth		DATE REQD -
SURFACE TREATMT			
IDENT METHOD	TAG		
PROJECT NUMBER	ATL-IP-ED-0035		
PROJECT NAME	US ATLAS SILICON SUBSYSTEM		
DWG BY	D UKEN	DATE	18-Feb-01
CHK BY	J WIRTH	DATE	29-Jun-01
APR BY	E ANDERSSEN	DATE	

SER NO. -

ERNEST ORLANDO LAWRENCE BERKELEY NATIONAL LABORATORY
UNIVERSITY OF CALIFORNIA - BERKELEY

ATLAS PIXEL DETECTOR
DISK SECTOR, MODULE LOCAL SUPPORT
WEDGE HARDPOINT, SECTOR FACING SUPPORT

MICROFILMED:	DWG. TYPE	SHOWN ON	SCALE: 2.000	DO NOT SCALE PRINTS
	PART	21F406	SHEET 1 OF 1	
PATENT CLEAR:	DESIGN ACCT. NO.	CATEGORY CODE	DWG. NO. 21F3591	SIZE / REV. 1
	PIAP-II	AP6110		

Rev. 1/8/2001 ATLAS

Dwg. File: 21F359 Model File: 21F359

DWG. NO.	SIZE	REV.	SH.
21F3581		1	1

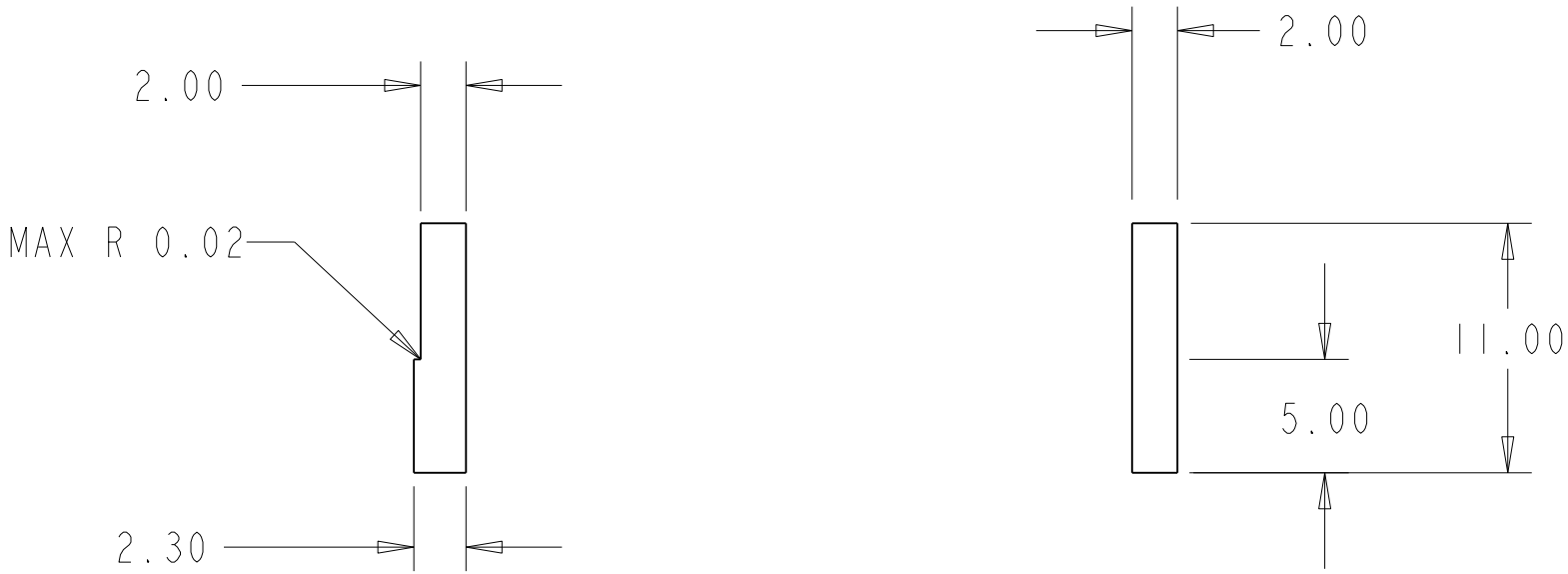

REV	DWG	CHK	DATE	CHANGES	DESCRIPTION	MATERIAL
						BFG 3D-CC

UNLESS OTHERWISE SPECIFIED

TOLERANCES		
X.X ±0.1	FRAC. ±1/64	
X.XX ±0.01	Angles ±0.50°	
X.XXX ±0.001	FINISH 125 √(μin)	

DO NOT SCALE PRINT

THREADS ARE CLASS 2
CHAMFER ENDS OF ALL SCREW TREADS 30°
CUT ROUND, 1.5 THREAD RELIEF ON MACHINED THREADS
BREAK EDGES .016 MAX. ON MACHINED WORK
REMOVE BURRS, WELD SPLATTER & LOOSE SCALE
IN ACCORDANCE WITH ASME Y14.5M & B46.1

SHOP ORDERS

ACCT NO.	SEE J.O.	NO. REQD 120	
DEL TO	JS WIRTH		
SURFACE TREATMT			
IDENT METHOD	TAG		
PROJECT NUMBER	ATL-IP-ED-0036		
PROJECT NAME	US ATLAS SILICON SUBSYSTEM		
DWG BY	D UKEN	DATE	18-Feb-01
CHK BY	J WIRTH	DATE	29-JUN-01
APR BY	E ANDERSSEN	DATE	

SER NO. -
DATE ISSD -
DATE REQD -

ERNEST ORLANDO LAWRENCE BERKELEY NATIONAL LABORATORY
UNIVERSITY OF CALIFORNIA - BERKELEY

ATLAS PIXEL DETECTOR
DISK SECTOR, MODULE LOCAL SUPPORT
BEAM HARDPOINT, SECTOR FACING SUPPORT

MICROFILMED:	DWG. TYPE	SHOWN ON	SCALE: 3.000	DO NOT SCALE PRINTS
	PART	21f406	SHEET 1 OF 1	
PATENT CLEAR:	DESIGN ACCT. NO.	CATEGORY CODE	21F358	REV.
	PIAPII	AP6110		1

Dwg. File: 21F358 Model File: 21F358

Rev. 1/8/2001 ATLAS

ITEM	PART NO	REQD	DESCRIPTION	MATERIAL
3	21F416-3		SECTOR FOAM COMPLETE	Allcomp CVD'ed RVC Foam
2	21f425		CYANATE ESTER FOR FOAM	BRYTE E01189-2M
1	21F354		FACING, SECTOR MOUNTSIDE	P30 CARBON-CARBON

MACHINE SURFACE TO FINAL THICKNESS,
AFTER PROFILE AND HOLES MACHINED

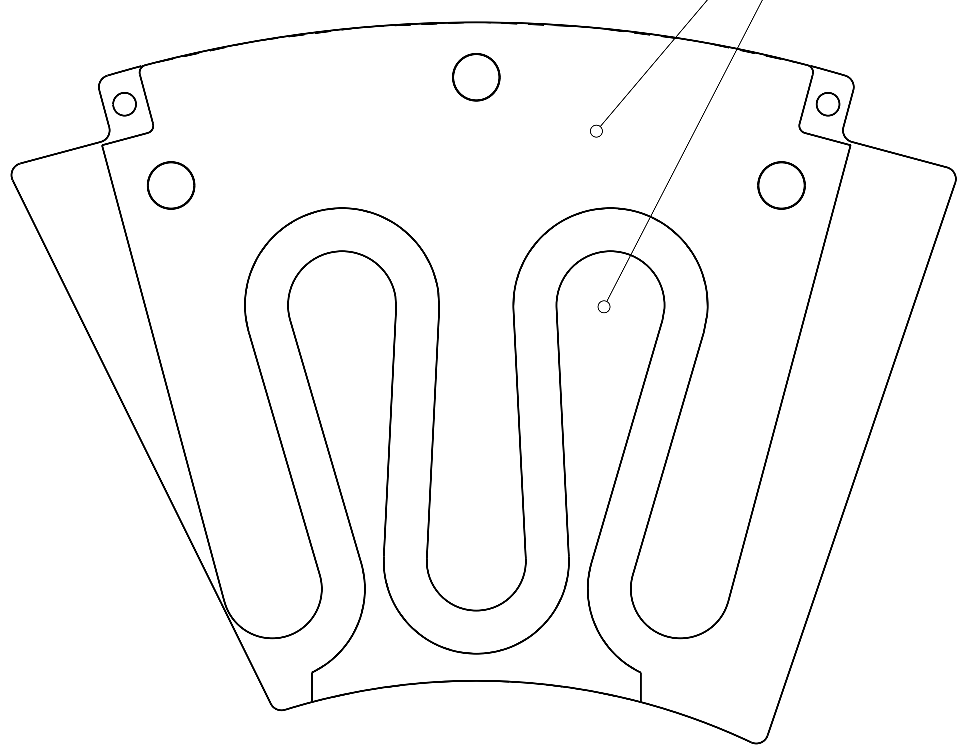

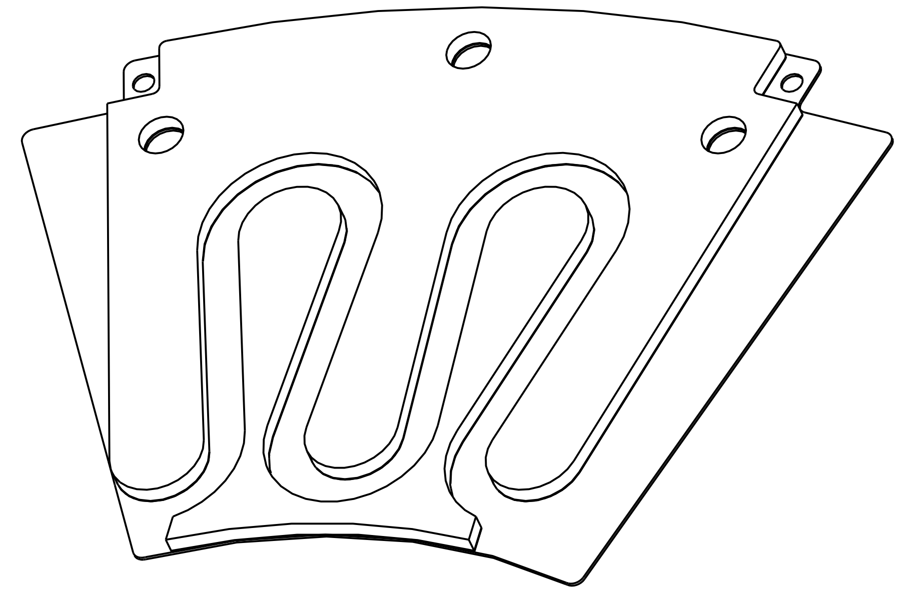

2.45 FINISHED FOAM THICKNESS
MEASURED FROM INSIDE FACING SURFACE
(SURFACE TO WHICH FOAM IS BONDED)

REV	DWG	CHK	ZONE	DATE	CHANGES

UNLESS OTHERWISE SPECIFIED

TOLERANCES: X.X ± 0.5 | FRAC. ± 1/64 | X.XX ± 0.05 | Angles ± 1.00° | X.XXX ± 0.010 | FINISH 125 μin

DO NOT SCALE PRINT

THREADS ARE CLASS 2
CHAMFER ENDS OF ALL SCREW TREADS 30°
CUT ROUND, 1.5 THREAD RELIEF ON MACHINED THREADS
BREAK EDGES .016 MAX. ON MACHINED WORK
REMOVE BURRS, WELD SPLATTER & LOOSE SCALE
IN ACCORDANCE WITH ASME Y14.5M & B46.1

SHOP ORDERS

ACCT NO.	See J.O.
NO. REQD	60
DEL TO	Jon Wirth
SURFACE TREATMT	-
IDENT METHOD	TAG
PROJECT NUMBER	ATL-IP-ED-0037
PROJECT NAME	US ATLAS SILICON SUBSYSTEM
DWG BY	J WIRTH — DATE 20-Jun-01
CHK BY	E ANDERSSEN — DATE 21-JUN-01
APR BY	E ANDERSSEN — DATE
SER NO.	-
DATE ISSD	-
DATE REQD	-

US ATLAS SILICON SUBSYSTEM (logo)

ERNEST ORLANDO LAWRENCE BERKELEY NATIONAL LABORATORY
UNIVERSITY OF CALIFORNIA - BERKELEY

ATLAS PIXEL DETECTOR
DISK SECTOR, MODULE LOCAL SUPPORT
FINISHED MOUNTSIDE FACING ASSEMBLY

MICROFILMED:	DWG. TYPE: ASSEM	SHOWN ON: 21f410	SCALE: 1.000	DO NOT SCALE PRINTS
PATENT CLEAR:	DESIGN ACCT. NO.: PIAP-11	CATEGORY CODE: AP6110	DWG. NO.: 21F4043	SIZE — REV.: 1

SHEET 1 OF 1

DWG. NO. 21F4043 SIZE REV. 1 SH. 1

Dwg. File: 21F404 Model File: 21F404

ITEM	PART NO	REQD	DESCRIPTION	MATERIAL
2	21f425		CYANATE ESTER FOR FOAM	BRYTE E01189-2M
1	21F355		FACING, SECTOR NON-MOUNTSIDE	P30 CARBON-CARBON

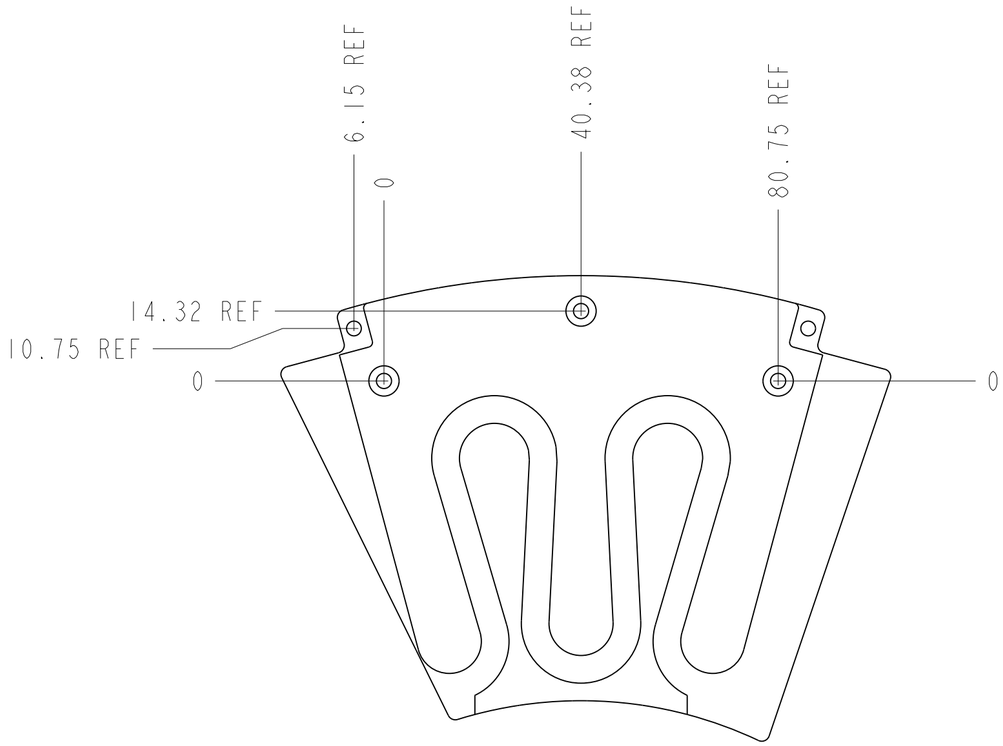

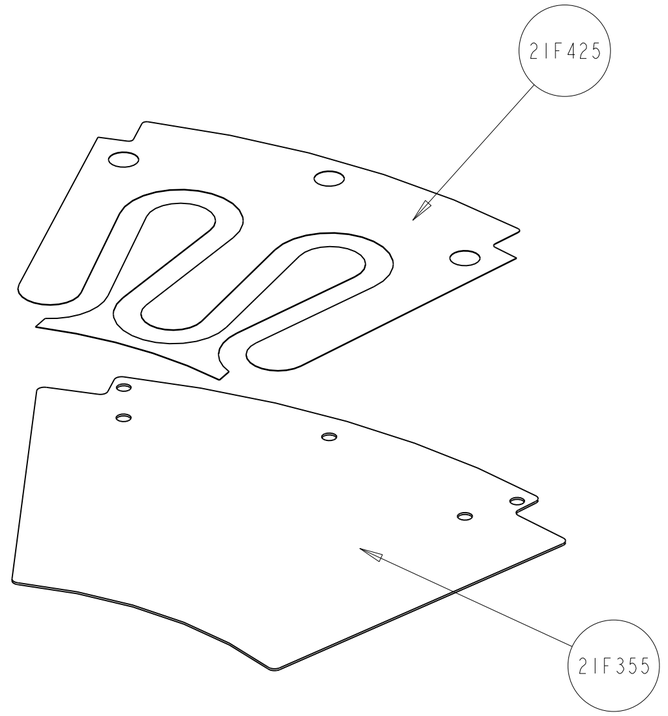

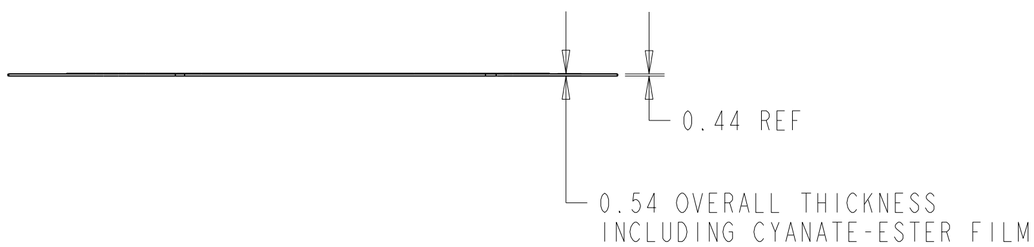

REV	DWG	CHK	ZONE	DATE	CHANGES

UNLESS OTHERWISE SPECIFIED

TOLERANCES			
	X.X ± 0.5	FRAC. ± 1/64	
	X.XX ± 0.05	Angles ± 1.00°	
	X.XXX ± 0.010	FINISH 125 √(μin)	

DO NOT SCALE PRINT

THREADS ARE CLASS 2
CHAMFER ENDS OF ALL SCREW TREADS 30°
CUT ROUND, 1.5 THREAD RELIEF ON MACHINED THREADS
BREAK EDGES .016 MAX. ON MACHINED WORK
REMOVE BURRS, WELD SPLATTER & LOOSE SCALE
IN ACCORDANCE WITH ASME Y14.5M & B46.1

SHOP ORDERS

ACCT NO.	See J.O.	NO. REQD 60	SER NO. -
DEL TO	Jon Wirth		DATE ISSD -
SURFACE TREATMT	-		DATE REQD -
IDENT METHOD	TAG		
PROJECT NUMBER	ATL-IP-ED-0040		US ATLAS SILICON SUBSYSTEM (logo)
PROJECT NAME	US ATLAS SILICON SUBSYSTEM		
DWG BY	J WIRTH		DATE 19-JUN-01
CHK BY	E ANDERSSEN		DATE 22-JUN-01
APR BY	E ANDERSSEN		DATE

ERNEST ORLANDO LAWRENCE BERKELEY NATIONAL LABORATORY
UNIVERSITY OF CALIFORNIA - BERKELEY

ATLAS PIXEL DETECTOR
DISK SECTOR, MODULE LOCAL SUPPORT
SECTOR FACING WITH C-E FOR FOAM

MICROFILMED:	DWG. TYPE	SHOWN ON	SCALE: 1.000	DO NOT SCALE PRINTS
	ASSEM		SHEET 1 OF 1	
PATENT CLEAR:	DESIGN ACCT. NO. PIAP-11	CATEGORY CODE AP6110	DWG. NO. 21F4013	SIZE / REV. 1

DWG. NO. 21F4013 SIZE REV. 1 SH. 1

Dwg. File: 21F401 Model File: 21F401

Rev 1/8/2001 ATLAS

ITEM	PART NO	REQD	DESCRIPTION	MATERIAL
3	21F416-1		SECTOR FOAM FACED	-
2	21f425		CYANATE ESTER FOR FOAM	BRYTE E01189-2M
1	21F355		FACING, SECTOR NON-MOUNTSIDE	P30 CARBON-CARBON

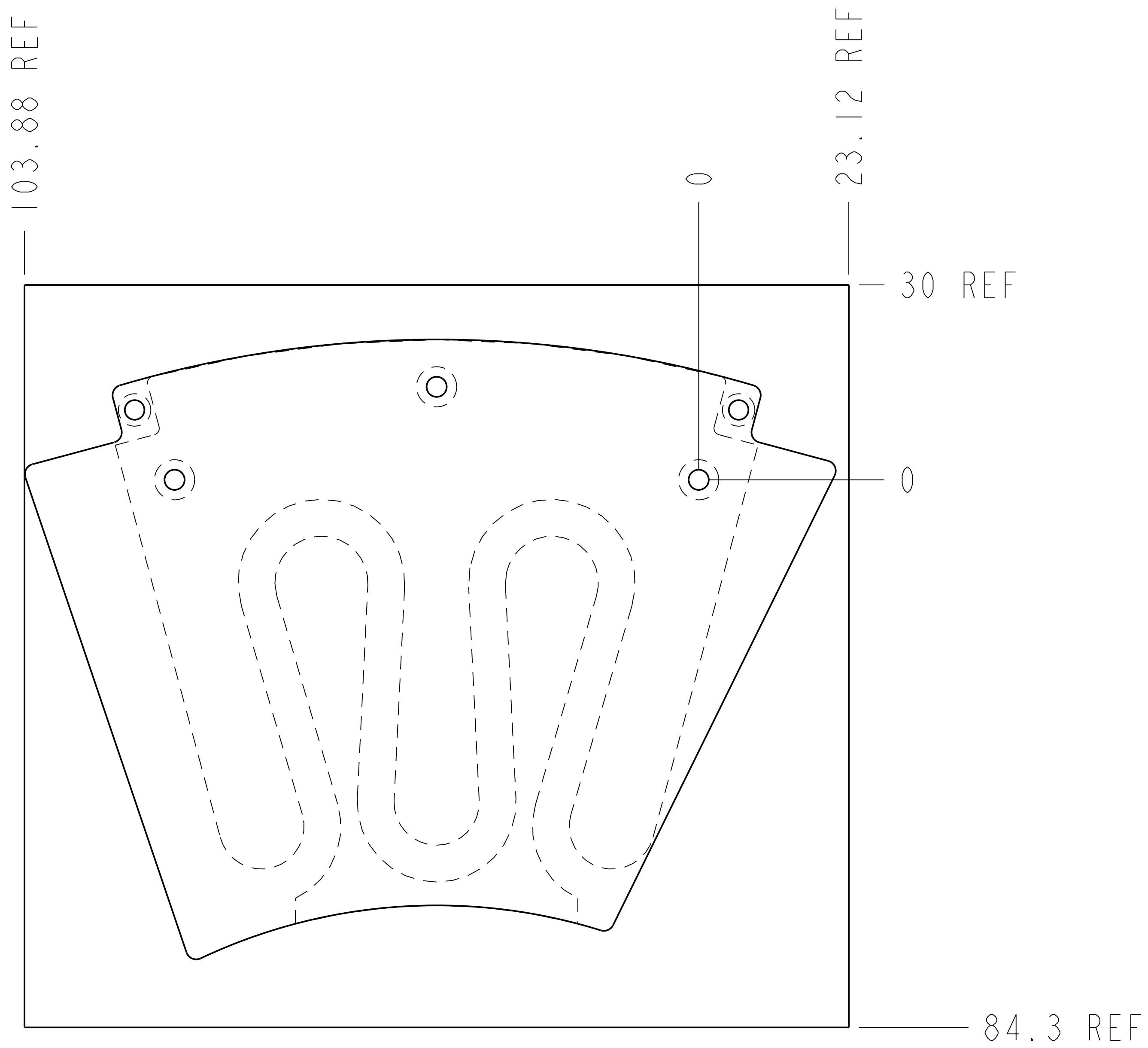

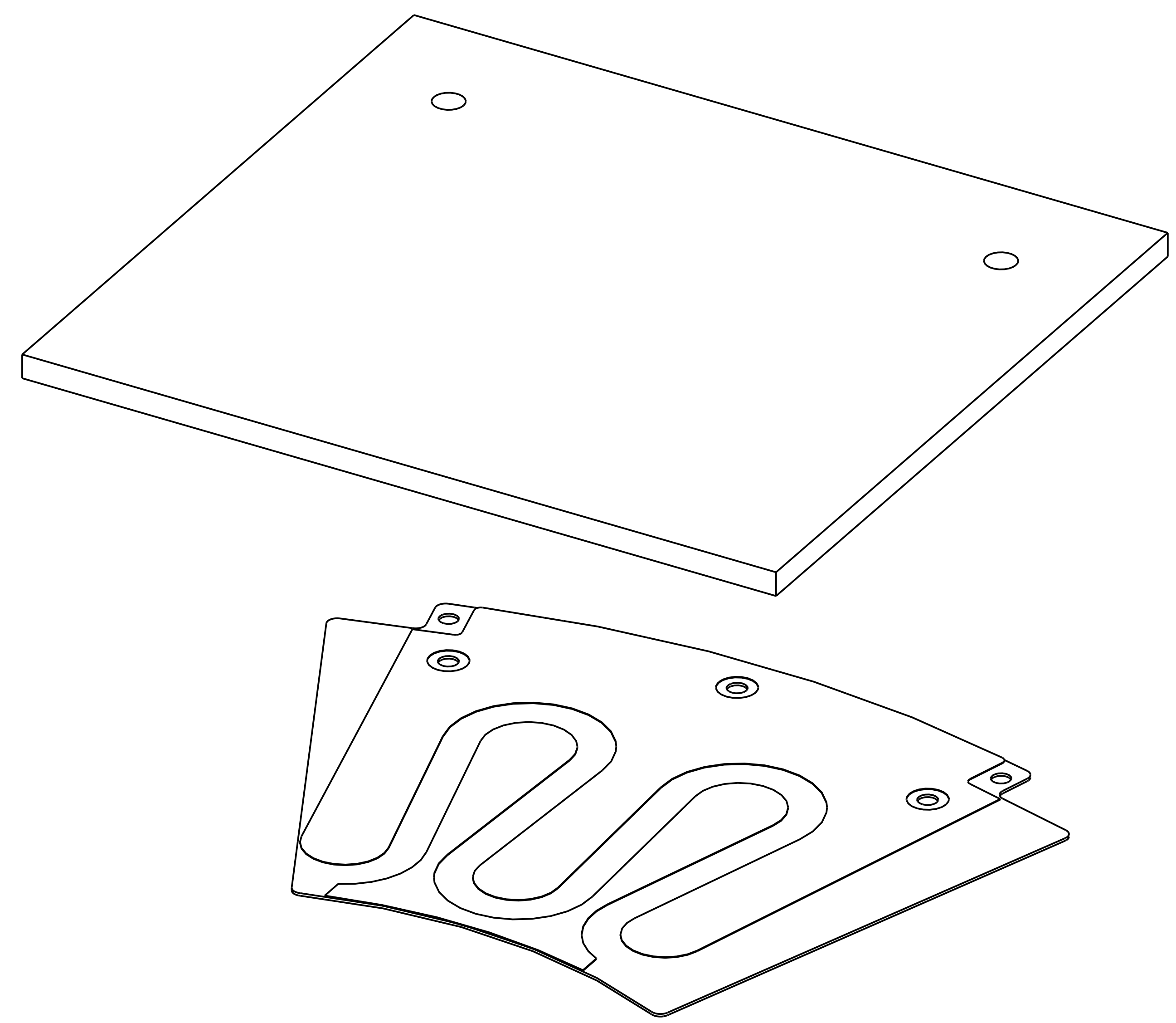

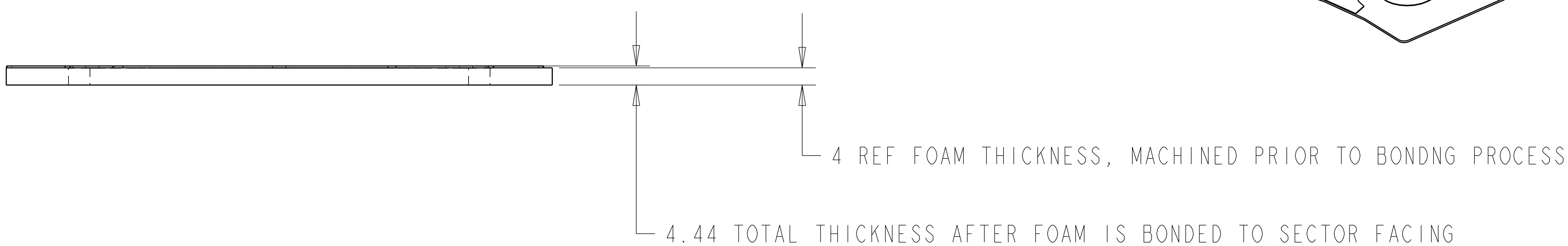

REV	DWG	CHK	ZONE	DATE	CHANGES

UNLESS OTHERWISE SPECIFIED

TOLERANCES		
	X.X ± 0.5	FRAC. ± 1/64
	X.XX ± 0.05	Angles ± 1.00°
	X.XXX ± 0.010	FINISH 125/(µin)

DO NOT SCALE PRINT

THREADS ARE CLASS 2
CHAMFER ENDS OF ALL SCREW TREADS 30°
CUT ROUND, 1.5 THREAD RELIEF ON MACHINED THREADS
BREAK EDGES .016 MAX. ON MACHINED WORK
REMOVE BURRS, WELD SPLATTER & LOOSE SCALE
IN ACCORDANCE WITH ASME Y14.5M & B46.1

SHOP ORDERS

ACCT NO.	See J.O. — NO. REQD 60
DEL TO	Jon Wirth
SURFACE TREATMT	-
IDENT METHOD	TAG
PROJECT NUMBER	ATL-IP-ED-0041
PROJECT NAME	US ATLAS SILICON SUBSYSTEM
DWG BY	J WIRTH — DATE 19-JUN-01
CHK BY	E ANDERSSEN — DATE 22-JUN-01
APR BY	E ANDERSSEN — DATE

SER NO. -
DATE ISSD -
DATE REQD -

US ATLAS SILICON SUBSYSTEM (logo)

ERNEST ORLANDO LAWRENCE BERKELEY NATIONAL LABORATORY
UNIVERSITY OF CALIFORNIA - BERKELEY

ATLAS PIXEL DETECTOR
DISK SECTOR, MODULE LOCAL SUPPORT
SECTOR FACING WITH FOAM BLANK

MICROFILMED:	DWG. TYPE	SHOWN ON	SCALE: 1.000	DO NOT SCALE PRINTS
	ASSEM		SHEET 1 OF 1	
PATENT CLEAR:	DESIGN ACCT. NO.	CATEGORY CODE	DWG. NO. / SIZE	REV.
	PIAP-11	AP6110	21F4023	1

DWG. NO. 21F4023 SIZE REV. 1 SH. 1

Dwg. File: 21F402 Model File: 21F402

ITEM	PART NO	REQD	DESCRIPTION	MATERIAL
3	21F416-2		SECTOR FOAM PROFILE CUT	-
2	21f425		CYANATE ESTER FOR FOAM	BRYTE E01189-2M
1	21F354		FACING, SECTOR MOUNTSIDE	P30 CARBON-CARBON

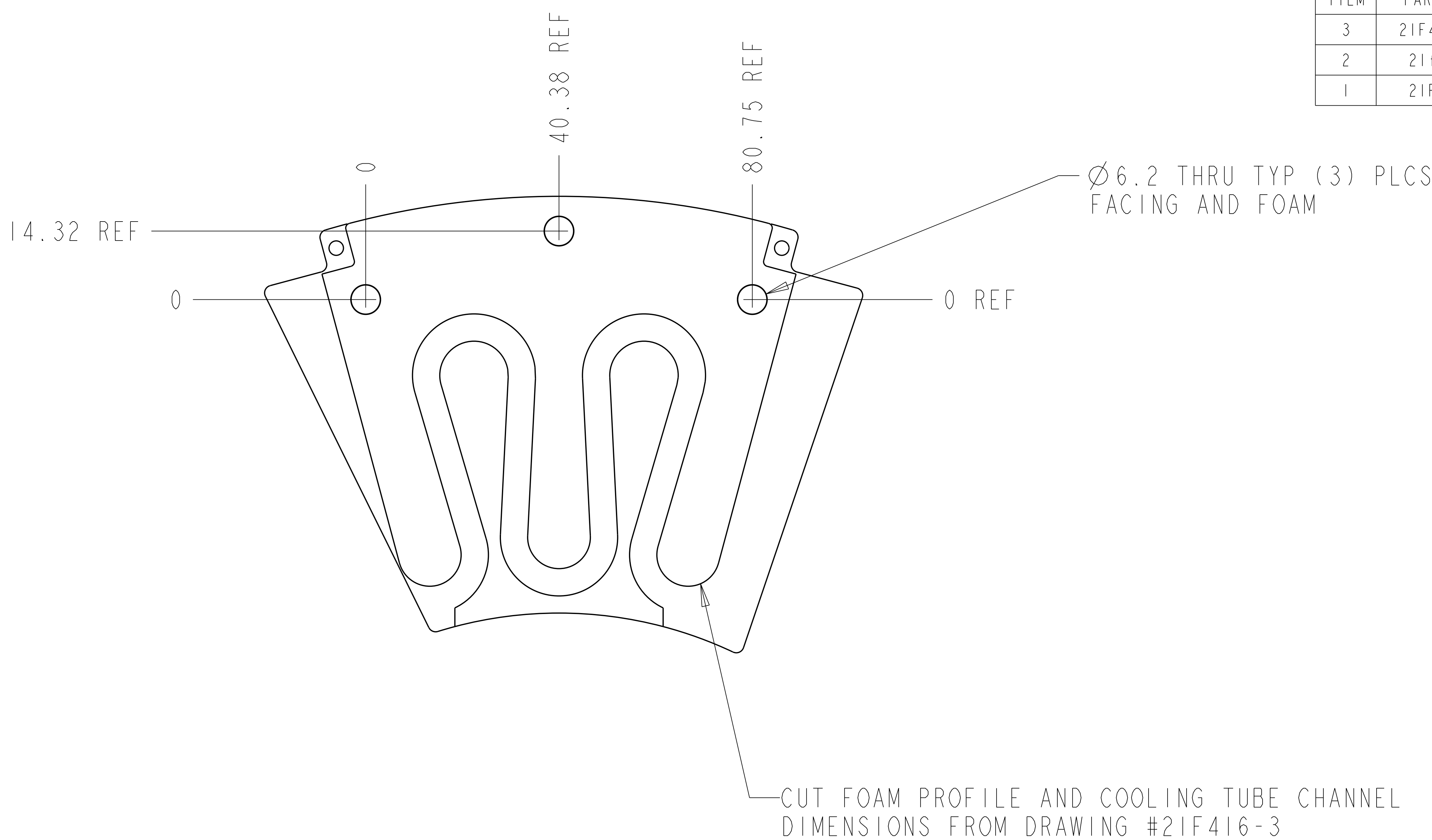

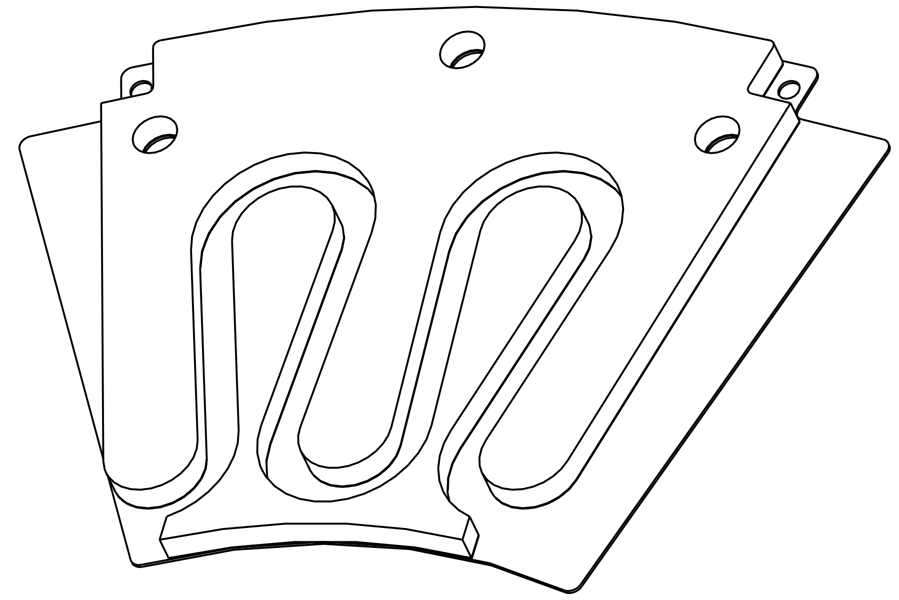

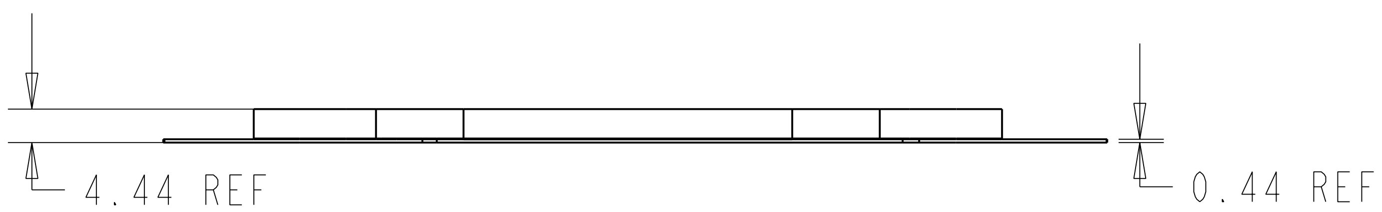

NOTE: KEEP CUTTERS .075 MM ABOVE SURFACE OF CARBON-CARBON FACE SHEET P/N 21F354

REV	DWG	CHK	ZONE	DATE	CHANGES

UNLESS OTHERWISE SPECIFIED

TOLERANCES		
	X.X ± 0.5	FRAC. ± 1/64
	X.XX ± 0.05	Angles ± 1.00°
	X.XXX ± 0.010	FINISH 125

DO NOT SCALE PRINT

THREADS ARE CLASS 2
CHAMFER ENDS OF ALL SCREW THREADS 30°
CUT ROUND, 1.5 THREAD RELIEF ON MACHINED THREADS
BREAK EDGES .016 MAX. ON MACHINED WORK
REMOVE BURRS, WELD SPLATTER & LOOSE SCALE
IN ACCORDANCE WITH ASME Y14.5M & B46.1

SHOP ORDERS

ACCT NO. See J.O.	NO. REQD 60	SER NO. -	
DEL TO Jon Wirth		DATE ISSD -	
SURFACE TREATMT -		DATE REQD -	
IDENT METHOD TAG			
PROJECT NUMBER ATL-IP-ED-0042		US ATLAS SILICON SUBSYSTEM (logo)	
PROJECT NAME US ATLAS SILICON SUBSYSTEM			
DWG BY J WIRTH		DATE 19-JUN-01	
CHK BY E ANDERSSEN		DATE 22-JUN-01	
APR BY E ANDERSSEN		DATE	

ERNEST ORLANDO LAWRENCE BERKELEY NATIONAL LABORATORY
UNIVERSITY OF CALIFORNIA - BERKELEY

ATLAS PIXEL DETECTOR
DISK SECTOR, MODULE LOCAL SUPPORT
MOUNTSIDE FACING WITH FOAM PROFILE CUT

MICROFILMED:	DWG. TYPE ASSEM	SHOWN ON	SCALE: 1.000	DO NOT SCALE PRINTS
			SHEET 1 OF 1	
PATENT CLEAR:	DESIGN ACCT. NO. PIAP-11	CATEGORY CODE AP6110	DWG. NO. 21F4033 SIZE	REV. 1

Dwg. File: 21F403 Model File: 21F403

DWG. NO. 21F4033 SIZE REV. 1 SH. 1

ITEM	PART NO	REQD	DESCRIPTION	MATERIAL

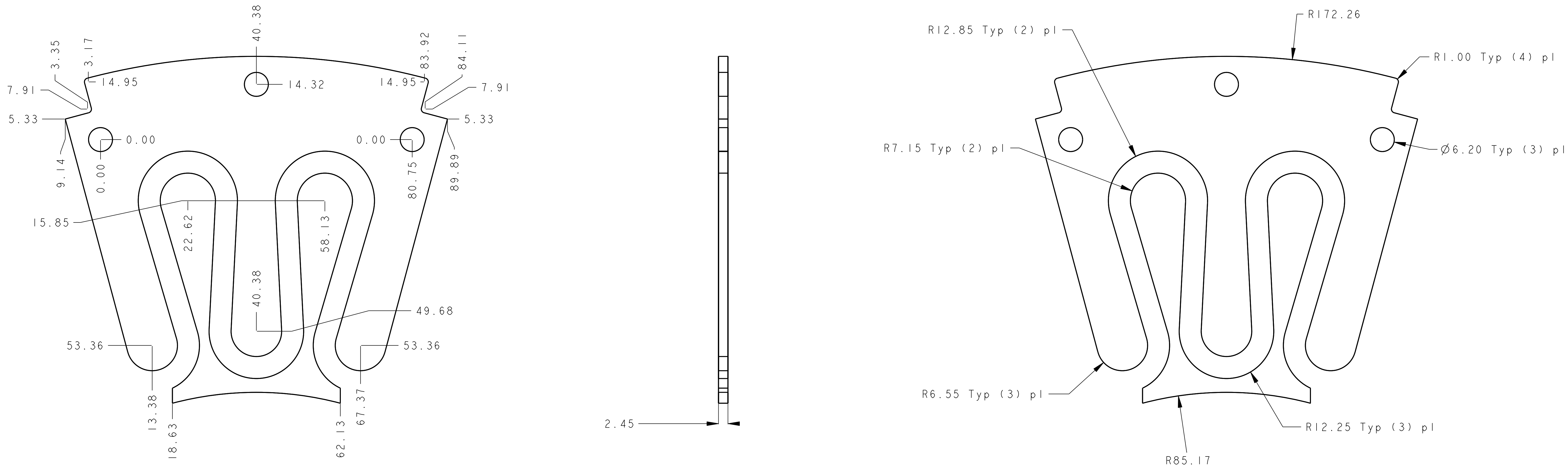

SCALE 1:1

REV	DWG	CHK	ZONE	DATE	CHANGES

UNLESS OTHERWISE SPECIFIED

TOLERANCES		
	X.X ± 0.5	FRAC. ± 1/64
	X.XX ± 0.05	Angles ± 1.00°
	X.XXX ± 0.010	FINISH 125/(μin)

DO NOT SCALE PRINT

THREADS ARE CLASS 2
CHAMFER ENDS OF ALL SCREW TREADS 30°
CUT ROUND, 1.5 THREAD RELIEF ON MACHINED THREADS
BREAK EDGES .016 MAX. ON MACHINED WORK
REMOVE BURRS, WELD SPLATTER & LOOSE SCALE
IN ACCORDANCE WITH ASME Y14.5M & B46.1

SHOP ORDERS

ACCT NO. See J.O.	NO. REQD 60	SER NO. -	
DEL TO Jon Wirth		DATE ISSD -	
SURFACE TREATMT -		DATE REQD -	
IDENT METHOD TAG			
PROJECT NUMBER ATL-IP-ED-0043		US ATLAS SILICON SUBSYSTEM (logo)	
PROJECT NAME US ATLAS SILICON SUBSYSTEM			
DWG BY J WIRTH		DATE 02-Jul-01	
CHK BY ANDERSSEN		DATE 2-JUL-01	
APR BY ANDERSSEN		DATE	

ERNEST ORLANDO LAWRENCE BERKELEY NATIONAL LABORATORY
UNIVERSITY OF CALIFORNIA - BERKELEY

ATLAS PIXEL DETECTOR
DISK SECTOR, MODULE LOCAL SUPPORT
SECTOR FOAM COMPLETE

MICROFILMED:	DWG. TYPE	SHOWN ON	SCALE: 1:1	DO NOT SCALE PRINTS
	PART		SHEET 1 OF 1	
PATENT CLEAR:	DESIGN ACCT. NO.	CATEGORY CODE	DWG. NO.	SIZE / REV.
	PIAP-11	AP6110	21F416-33	1

DWG. NO. 21F416-33 SIZE REV. 1 SH. 1

Rev. 1/8/2001 ATLAS

Dwg. File: 21F416-3 Model File: 21F416-3

DESCRIPTION	MATERIAL	MAT. LOCATION
-	-	-

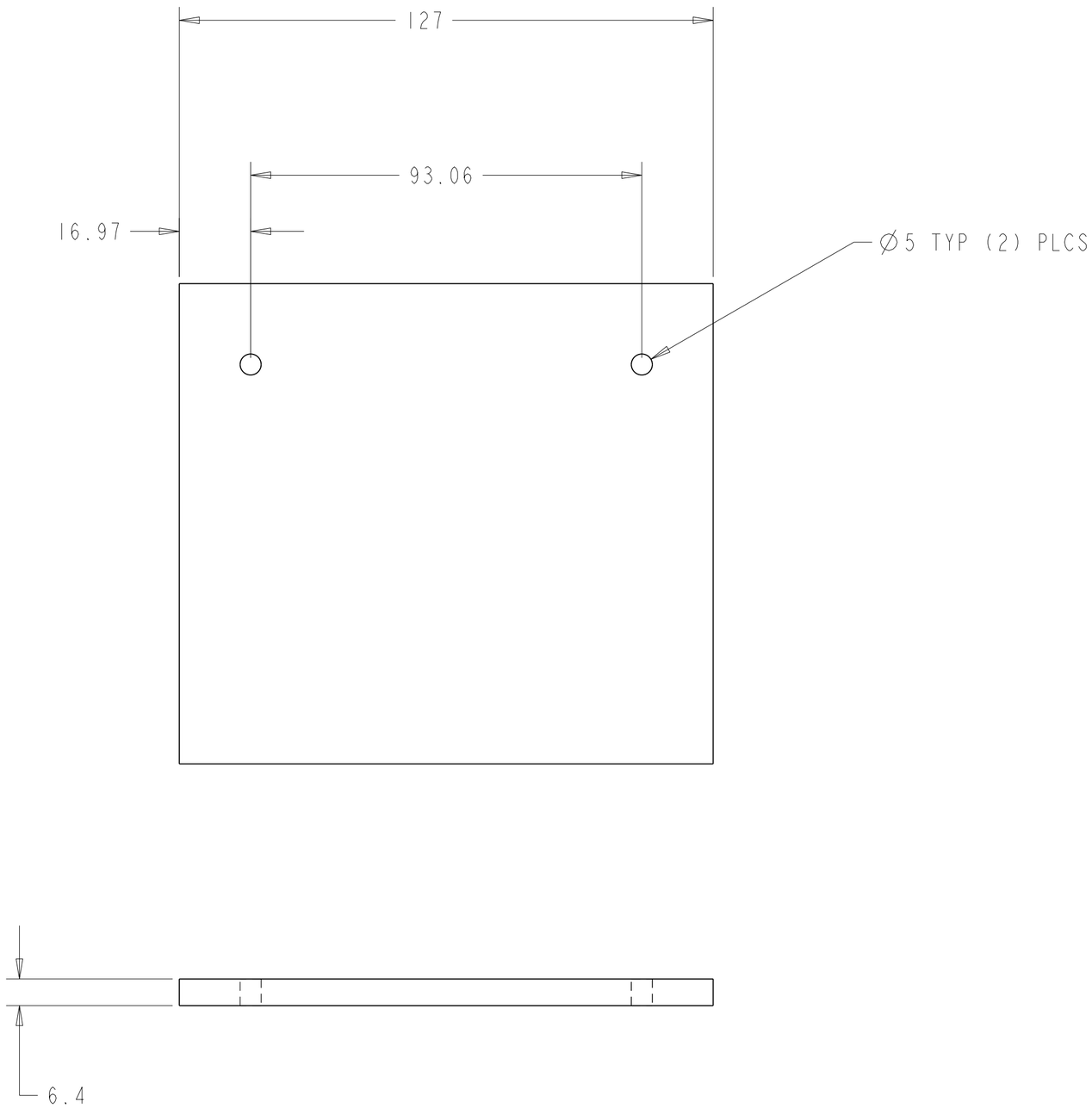

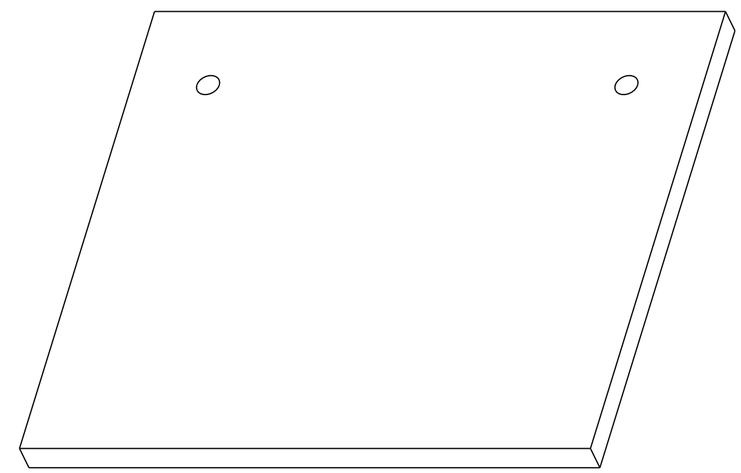

REV	DWG	CHK	ZONE	DATE	CHANGES

UNLESS OTHERWISE SPECIFIED

TOLERANCES			
	X.X ± 0.5	FRAC. ± 1/64	
	X.XX ± 0.05	Angles ± 1.00°	
	X.XXX ± 0.010	FINISH 125 √(μin)	

DO NOT SCALE PRINT

THREADS ARE CLASS 2
CHAMFER ENDS OF ALL SCREW TREADS 30°
CUT ROUND, 1.5 THREAD RELIEF ON MACHINED THREADS
BREAK EDGES .016 MAX. ON MACHINED WORK
REMOVE BURRS, WELD SPLATTER & LOOSE SCALE
IN ACCORDANCE WITH ASME Y14.5M & B46.1

SHOP ORDERS

ACCT NO.	See J.O.	NO. REQD	60
DEL TO	Jon Wirth		
SURFACE TREATMT	-		
IDENT METHOD	TAG		
PROJECT NUMBER	ATL-IP-ED-0038		
PROJECT NAME	US ATLAS SILICON SUBSYSTEM		
DWG BY	J WIRTH	DATE	19-JUN-01
CHK BY	ANDERSSEN	DATE	22-JUN_01
APR BY	ANDERSSEN	DATE	

SER NO.	-
DATE ISSD	-
DATE REQD	-

US ATLAS SILICON SUBSYSTEM (logo)

ERNEST ORLANDO LAWRENCE BERKELEY NATIONAL LABORATORY
UNIVERSITY OF CALIFORNIA - BERKELEY

ATLAS PIXEL DETECTOR
DISK SECTOR, MODULE LOCAL SUPPORT
SECTOR FOAM BLANK

MICROFILMED:	DWG. TYPE	SHOWN ON	SCALE: 1.000	DO NOT SCALE PRINTS
	PART		SHEET 1 OF 1	
PATENT CLEAR:	DESIGN ACCT. NO.	CATEGORY CODE	DWG. NO.	SIZE / REV.
	PIAP-II	AP6110	21F416-03	1

Dwg. File: 21F416-0 Model File: 21F416-0

DWG. NO. 21F416-03 SIZE 1 REV. 1 SH. 1

Rev 7/02/001 ATLAS

DESCRIPTION	MATERIAL	MAT. LOCATION
-	-	-

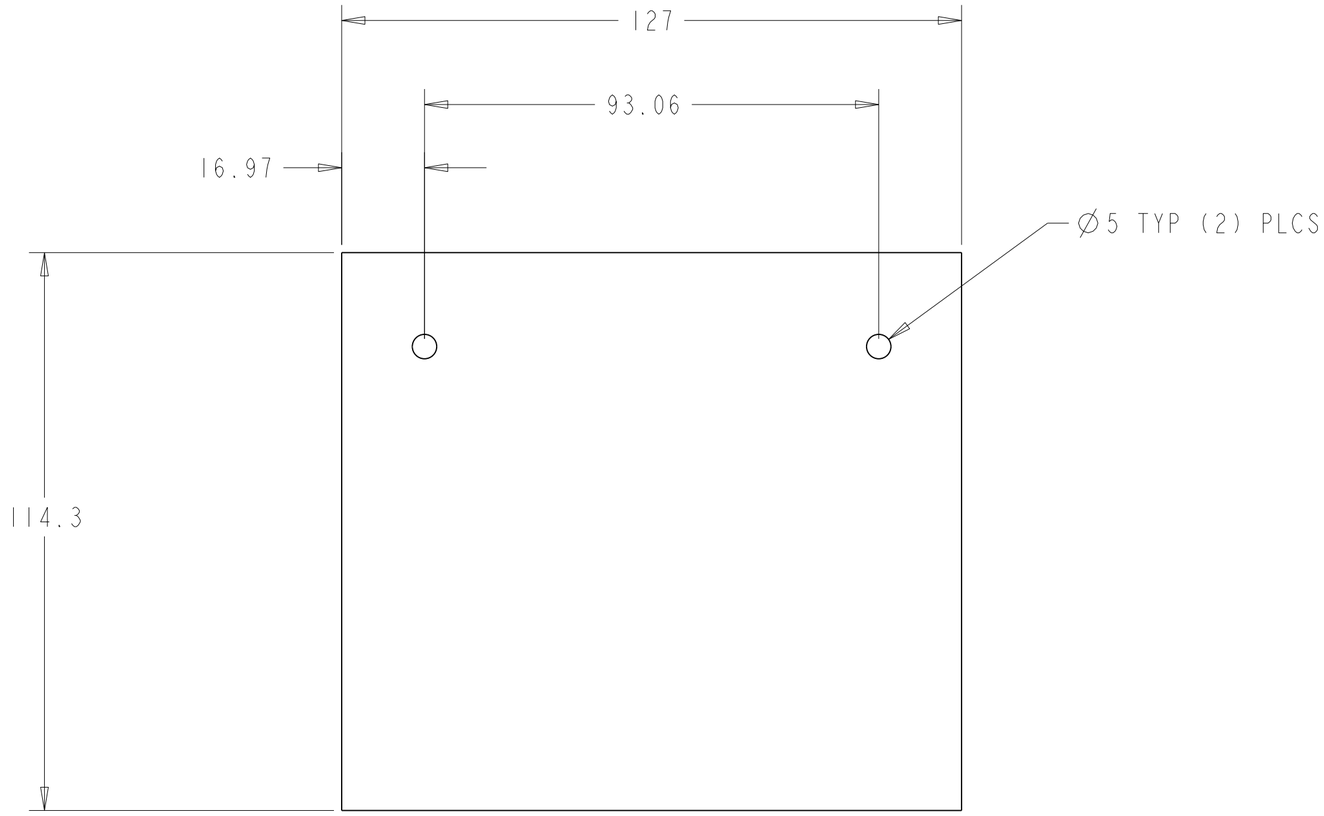

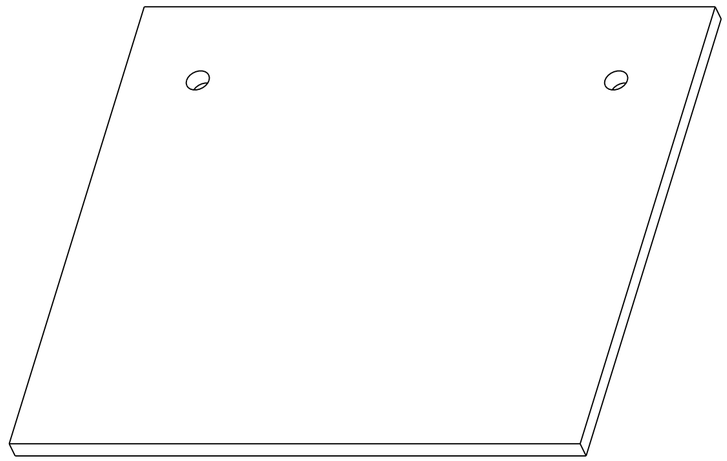

4 MM THICKNESS AFTER FACING
FACE BOTH SIDES PARALLEL WITHIN .075 MM

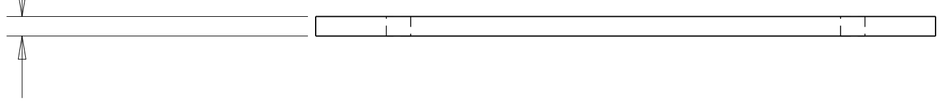

REV	DWG	CHK	ZONE	DATE	CHANGES

UNLESS OTHERWISE SPECIFIED

TOLERANCES		
	X.X ± 0.5	FRAC. ± 1/64
	X.XX ± 0.05	Angles ± 1.00°
	X.XXX ± 0.010	FINISH 125 √(μin)

DO NOT SCALE PRINT

THREADS ARE CLASS 2
CHAMFER ENDS OF ALL SCREW TREADS 30°
CUT ROUND, 1.5 THREAD RELIEF ON MACHINED THREADS
BREAK EDGES .016 MAX. ON MACHINED WORK
REMOVE BURRS, WELD SPLATTER & LOOSE SCALE
IN ACCORDANCE WITH ASME Y14.5M & B46.1

SHOP ORDERS

ACCT NO. See J.O.	NO. REQD 60	SER NO. -	
DEL TO Jon Wirth		DATE ISSD -	
SURFACE TREATMT -		DATE REQD -	
IDENT METHOD TAG			
PROJECT NUMBER ATL-IP-ED-0039		US ATLAS SILICON SUBSYSTEM (logo)	
PROJECT NAME US ATLAS SILICON SUBSYSTEM			
DWG BY J WIRTH		DATE 19-JUN-01	
CHK BY ANDERSSEN		DATE 22-JUN-01	
APR BY ANDERSSEN		DATE	

ERNEST ORLANDO LAWRENCE
BERKELEY NATIONAL LABORATORY
UNIVERSITY OF CALIFORNIA - BERKELEY

ATLAS PIXEL DETECTOR
DISK SECTOR, MODULE LOCAL SUPPORT
SECTOR FOAM FACED

MICROFILMED:	DWG. TYPE	SHOWN ON	SCALE: 1.000	DO NOT SCALE PRINTS
	PART		SHEET 1 OF 1	
PATENT CLEAR:	DESIGN ACCT. NO.	CATEGORY CODE	DWG. NO.	SIZE / REV.
	PIAP-11	AP6110	21F416-13	1

Dwg. File: 21F416-1 Model File: 21F416-1

Rev 1/8/2001 ATLAS

DWG. NO. 21F416-13 SIZE REV. 1 SH. 1

ITEM	PART NO	REQD	DESCRIPTION	MATERIAL
4		2		AIT CGL 7018 LV-XF (3% 0.75 µ glass beads)
3	21F357	2	STRAIN-RELIEF, SECTOR COOLING TUBE	ALUMINUM 6061 T6
2	21F353	1	TUBE, SECTOR COOLING	ALUMINUM 3003
1	21F347	2	SECTOR COOLANT FITTING	6063 AL

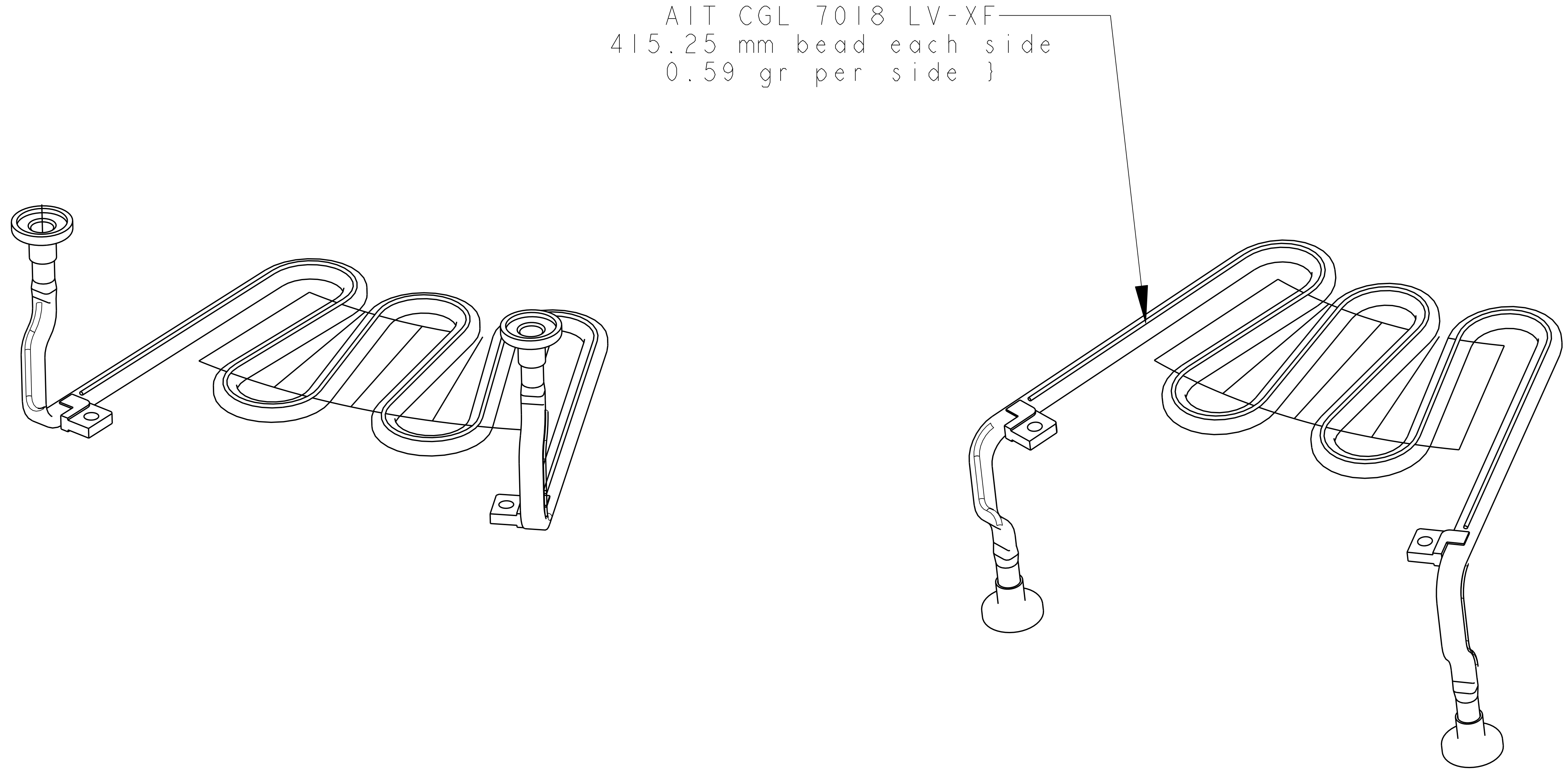

REV	DWG	CHK	ZONE	DATE	CHANGES

UNLESS OTHERWISE SPECIFIED

TOLERANCES: X.X ± 0.5 | FRAC. ± 1/64 | X.XX ± 0.05 | Angles ± 1.00° | X.XXX ± 0.010 | FINISH 125

DO NOT SCALE PRINT

THREADS ARE CLASS 2
CHAMFER ENDS OF ALL SCREW THREADS 30°
CUT ROUND, 1.5 THREAD RELIEF ON MACHINED THREADS
BREAK EDGES .016 MAX. ON MACHINED WORK
REMOVE BURRS, WELD SPLATTER & LOOSE SCALE
IN ACCORDANCE WITH ASME Y14.5M & B46.1

SHOP ORDERS

ACCT NO.	See J.O.
NO. REQD	
SER NO.	-
DATE ISSD	-
DEL TO	Jon Wirth
DATE REQD	-
SURFACE TREATMT	
IDENT METHOD	TAG
PROJECT NUMBER	ATL-IP-ED-0046
PROJECT NAME	
DWG BY	Jon Wirth — DATE 03-Jul-01
CHK BY	E. ANDERSSEN — DATE 3-JUL-01
APR BY	E. ANDERSSEN — DATE

ERNEST ORLANDO LAWRENCE
BERKELEY NATIONAL LABORATORY
UNIVERSITY OF CALIFORNIA - BERKELEY

ATLAS PIXEL DETECTOR
LOCAL SUPPORT DISK SECTORS
Sector Cooling Tube with CGL 7018 LV-XF

MICROFILMED:	DWG. TYPE	SHOWN ON	SCALE: 1/1	DO NOT SCALE PRINTS
	ASSEM		SHEET 2 OF 2	
PATENT CLEAR:	DESIGN ACCT. NO.	CATEGORY CODE	DWG. NO. SIZE	REV.
	PIAP-11	AP6110	21F4713	1

DWG. NO. 21F4713 SIZE REV. 1 SH. 2

DWG. NO.	SIZE	REV.	SH.
21F4704	1	1	1

ITEM	PART NO	REQD	DESCRIPTION	MATERIAL
6	21F460		FIXTURE FOR APPLICATION OF CGL TO SECTOR TUBE	-
5	21F357		STRAIN-RELIEF, SECTOR COOLING TUBE	ALUMINUM 6061 T6
4	21F357		STRAIN-RELIEF, SECTOR COOLING TUBE	ALUMINUM 6061 T6
3	21F347		SECTOR COOLANT FITTING	6063 AL
2	21F347		SECTOR COOLANT FITTING	6063 AL
1	21F353		TUBE, SECTOR COOLING	ALUMINUM 3003

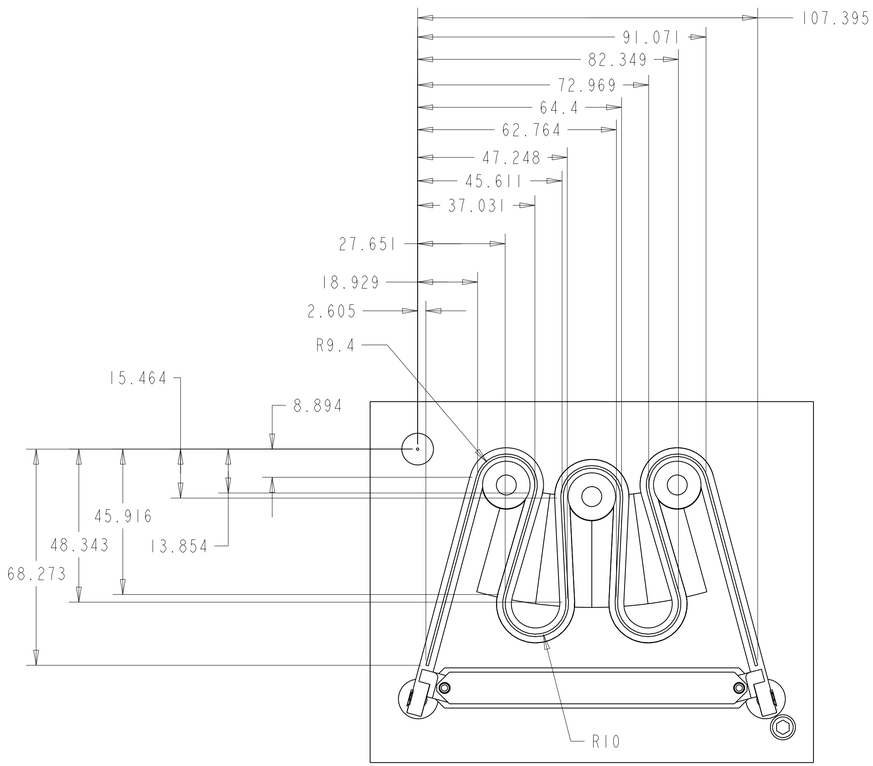

SEGMENT ENDPOINTS OF CGL BEAD
RELATIVE TO SYRINGE LOCATING POST

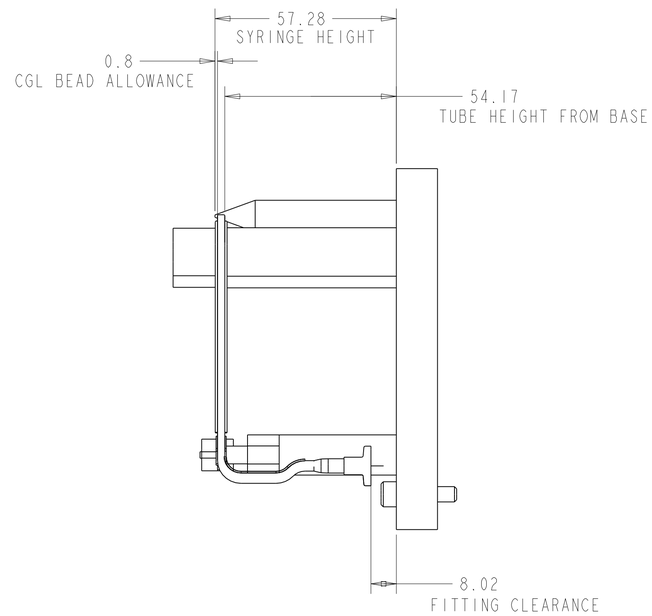

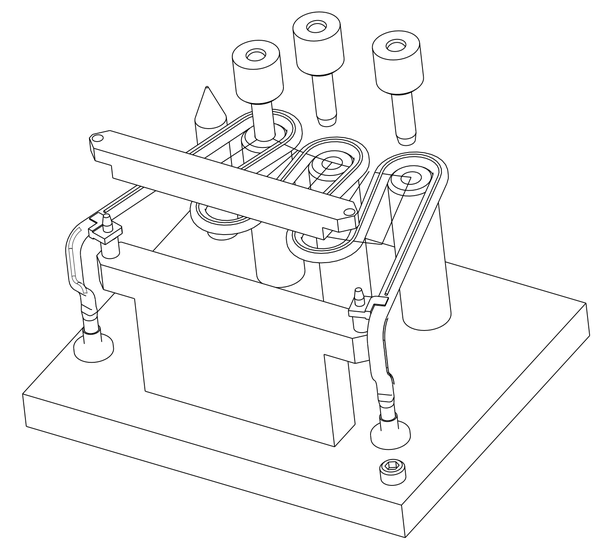

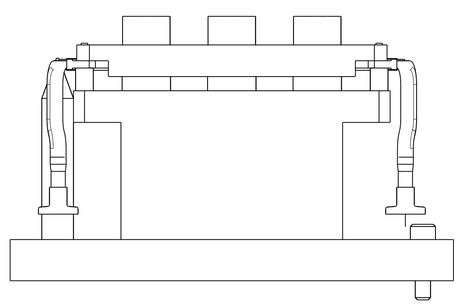

REV	DWG	CHK	ZONE	DATE	CHANGES

UNLESS OTHERWISE SPECIFIED

TOLERANCES: X.X ± 0.5 | FRAC. ± 1/64 | X.XX ± 0.05 | Angles ± 1.00° | X.XXX ± 0.010 | FINISH 125 √(μin)

DO NOT SCALE PRINT

THREADS ARE CLASS 2
CHAMFER ENDS OF ALL SCREW TREADS 30°
CUT ROUND, 1.5 THREAD RELIEF ON MACHINED THREADS
BREAK EDGES .016 MAX. ON MACHINED WORK
REMOVE BURRS, WELD SPLATTER & LOOSE SCALE
IN ACCORDANCE WITH ASME Y14.5M & B46.1

SHOP ORDERS

ACCT NO.	See J.O.	NO. REQD	
DEL TO	Jon Wirth		
SURFACE TREATMT			
IDENT METHOD	TAG		
PROJECT NUMBER	ATL-IP-ED-0047		
PROJECT NAME			
DWG BY	N. HARTMAN	DATE	05-Jun-01
CHK BY	E. ANDERSSEN	DATE	11-JUN-01
APR BY	E. ANDERSSEN	DATE	

SER NO. -
DATE ISSD -
DATE REQD -

ERNEST ORLANDO LAWRENCE
BERKELEY NATIONAL LABORATORY
UNIVERSITY OF CALIFORNIA - BERKELEY

ATLAS PIXEL DETECTOR
LOCAL SUPPORT DISK SECTORS
SECTOR COOLING TUBE CGL APPLICATION LAYOUT

MICROFILMED:	DWG. TYPE	SHOWN ON	SCALE: 1.000	DO NOT SCALE PRINTS
	ASSEM		SHEET 1 OF 1	
PATENT CLEAR:	DESIGN ACCT. NO.	CATEGORY CODE	DWG. NO.	SIZE / REV.
	PIAPII	AP6110	21F4704	1

Dwg. File: 21F4704.Model File: 21F4704

ITEM	PART NO	REQD	DESCRIPTION	MATERIAL
3	21F357	2	STRAIN-RELIEF, SECTOR COOLING TUBE	ALUMINUM 6061 T6
2	21F353	1	TUBE, SECTOR COOLING	ALUMINUM 3003
1	21F347	2	SECTOR COOLANT FITTING	6063 AL

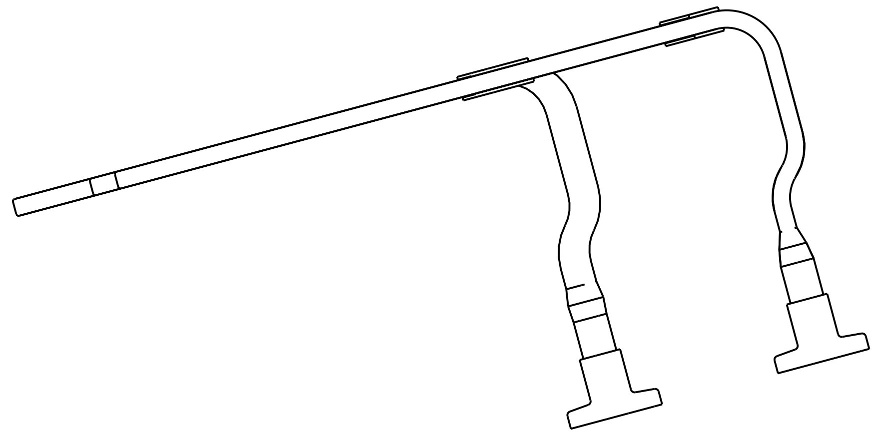

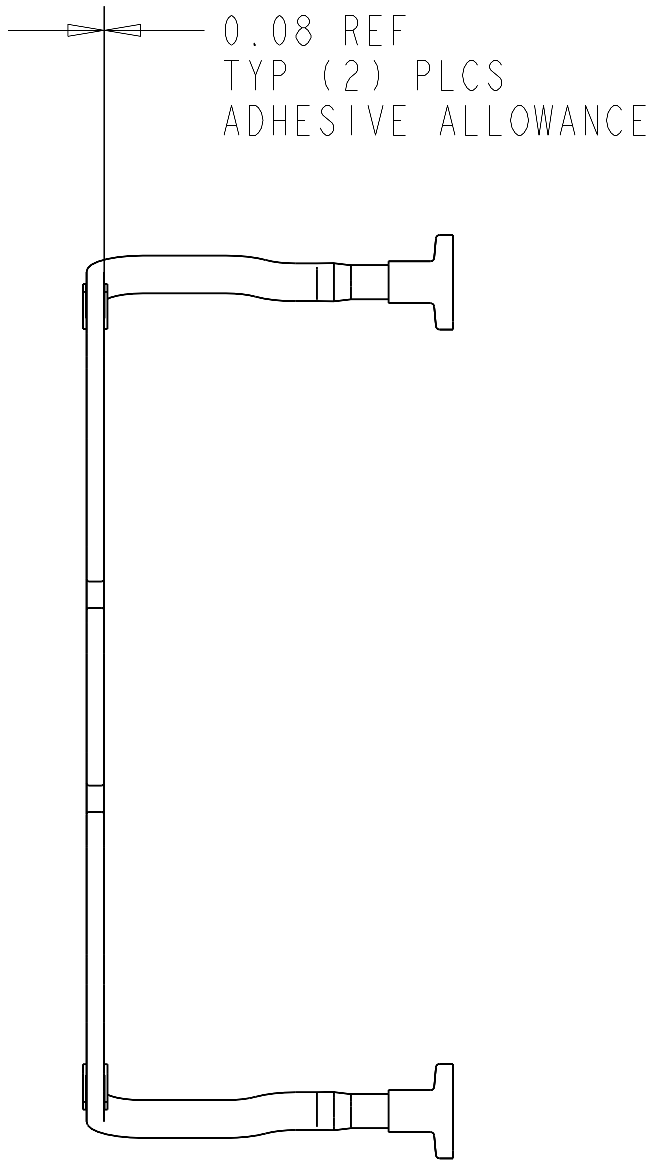

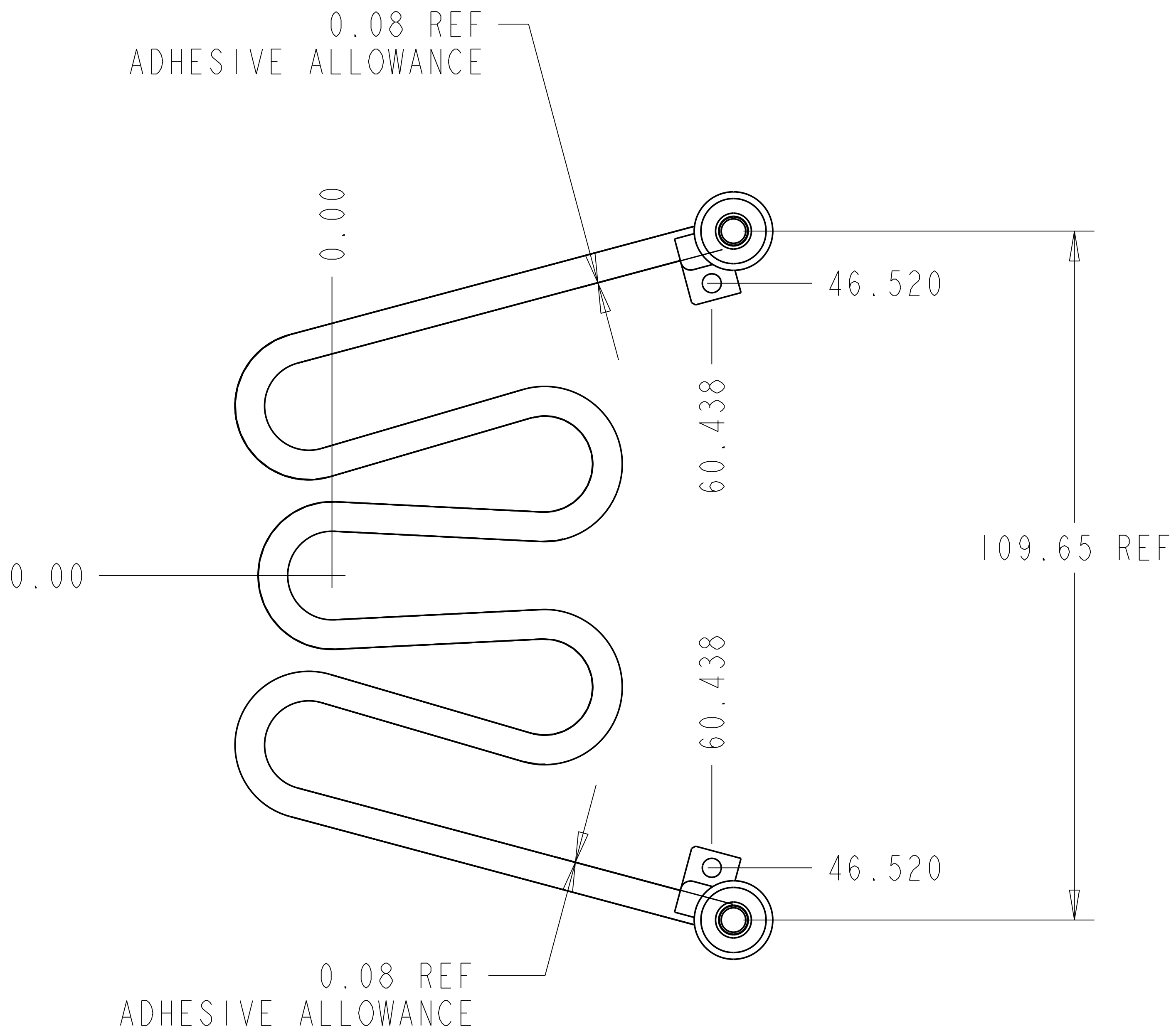

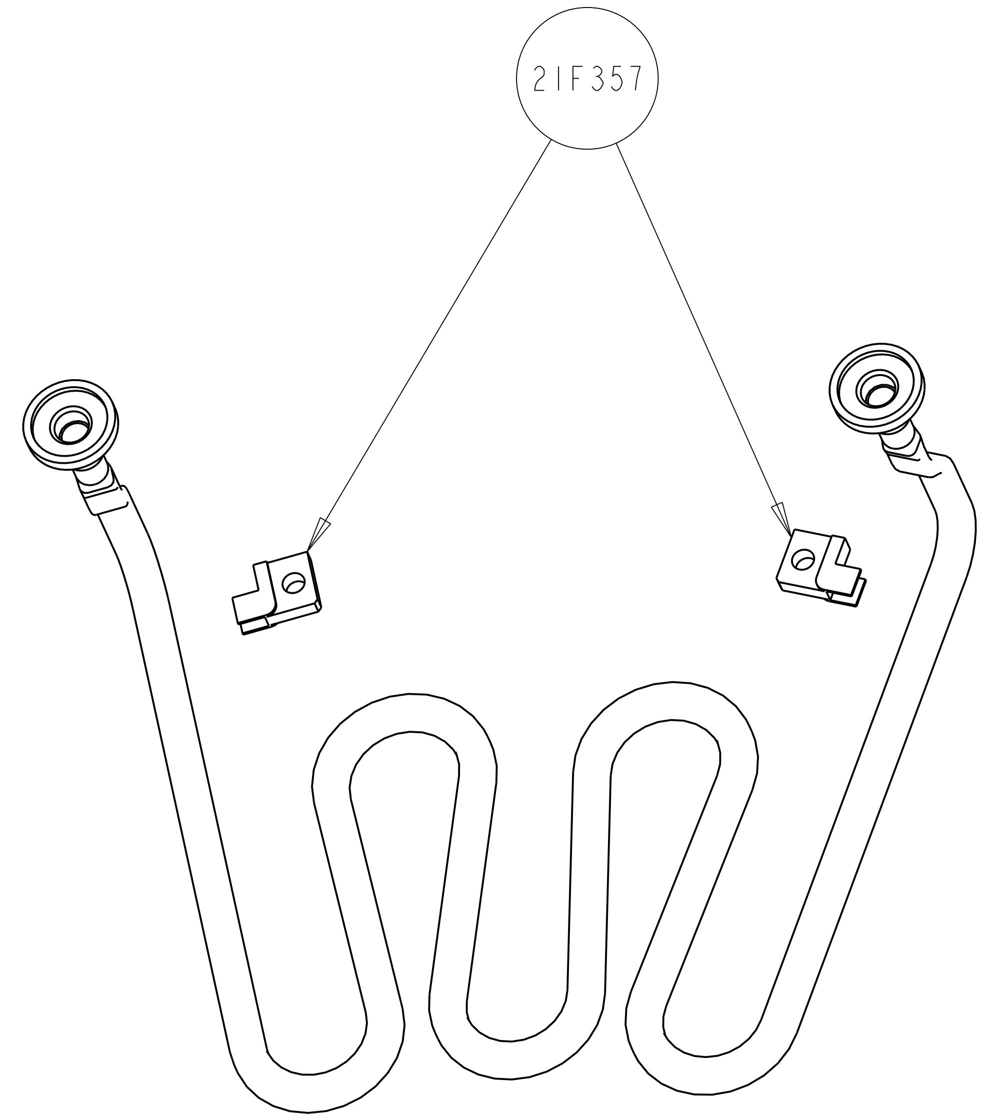

NOTE: BOND STRAINRELIEFS WITH HYSOL EA9396NA

REV	DWG	CHK	ZONE	DATE	CHANGES

UNLESS OTHERWISE SPECIFIED

TOLERANCES		
	X.X ± 0.5	FRAC. ± 1/64
	X.XX ± 0.05	Angles ± 1.00°
	X.XXX ± 0.010	FINISH 125

DO NOT SCALE PRINT

THREADS ARE CLASS 2
CHAMFER ENDS OF ALL SCREW TREADS 30°
CUT ROUND, 1.5 THREAD RELIEF ON MACHINED THREADS
BREAK EDGES .016 MAX. ON MACHINED WORK
REMOVE BURRS, WELD SPLATTER & LOOSE SCALE
IN ACCORDANCE WITH ASME Y14.5M & B46.1

SHOP ORDERS		SER NO.	-
ACCT NO. See J.O.	NO. REQD 60	DATE ISSD	-
DEL TO Jon Wirth		DATE REQD	-
SURFACE TREATMT			
IDENT METHOD TAG			
PROJECT NUMBER ATL-IP-ED-0048			
PROJECT NAME			
DWG BY N. HARTMAN		DATE 21-Jun-01	
CHK BY E. ANDERSSEN		DATE 22-JUN-01	
APR BY E. ANDERSSEN		DATE	

ERNEST ORLANDO LAWRENCE BERKELEY NATIONAL LABORATORY
UNIVERSITY OF CALIFORNIA - BERKELEY

ATLAS PIXEL DETECTOR
LOCAL SUPPORT DISK SECTORS
SECTOR TUBE ASSEMBLY

MICROFILMED:	DWG. TYPE ASSEM	SHOWN ON	SCALE: 1.000	DO NOT SCALE PRINTS
PATENT CLEAR:	DESIGN ACCT. NO. PIAP-11	CATEGORY CODE AP6110	DWG. NO. 21F4093	REV. 1

SHEET 1 OF 1

DWG. NO. 21F4093 SIZE REV. 1 SH. 1

DWG. NO.	SIZE	REV.	SH.
21F3571		1	1

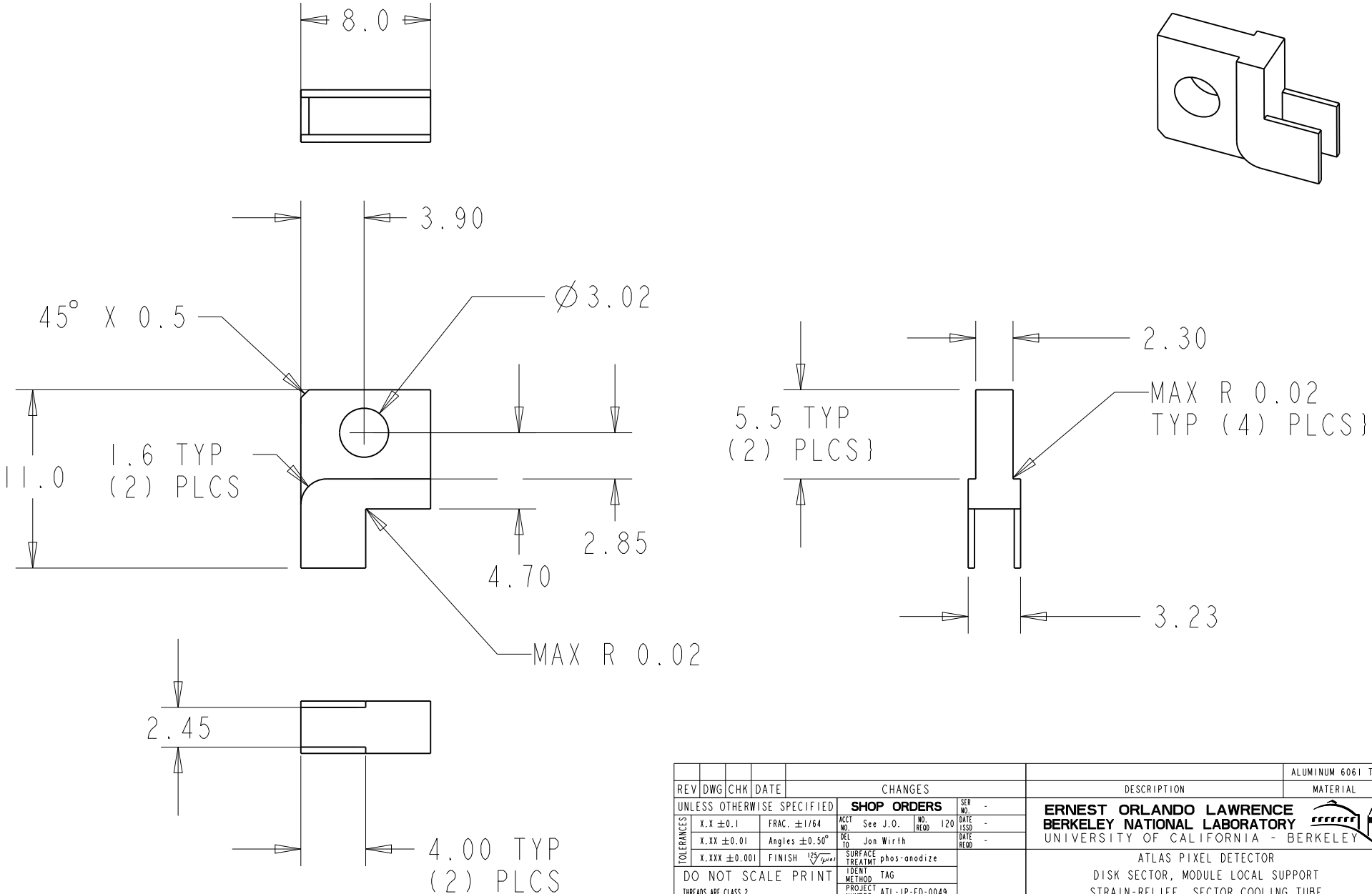

REV	DWG	CHK	DATE	CHANGES	DESCRIPTION	MATERIAL
						ALUMINUM 6061 T6

UNLESS OTHERWISE SPECIFIED

TOLERANCES: X.X ±0.1 | FRAC. ±1/64 | X.XX ±0.01 | Angles ±0.50° | X.XXX ±0.001 | FINISH 125 √(μin)

DO NOT SCALE PRINT

THREADS ARE CLASS 2
CHAMFER ENDS OF ALL SCREW TREADS 30°
CUT ROUND, 1.5 THREAD RELIEF ON MACHINED THREADS
BREAK EDGES .016 MAX. ON MACHINED WORK
REMOVE BURRS, WELD SPLATTER & LOOSE SCALE
IN ACCORDANCE WITH ASME Y14.5M & B46.1

SHOP ORDERS

ACCT NO.	See J.O.	NO. REQD	120
DEL TO	Jon Wirth		
SURFACE TREATMT	phos-anodize		
IDENT METHOD	TAG		
PROJECT NUMBER	ATL-IP-ED-0049		
PROJECT NAME	US ATLAS SILICON SUBSYSTEM		
DWG BY	D UKEN	DATE	18-FEB-01
CHK BY	J WIRTH	DATE	29-JUN-01
APR BY	E ANDERSSEN	DATE	

SER NO. -
DATE ISSD -
DATE REQD -

ERNEST ORLANDO LAWRENCE BERKELEY NATIONAL LABORATORY
UNIVERSITY OF CALIFORNIA - BERKELEY

ATLAS PIXEL DETECTOR
DISK SECTOR, MODULE LOCAL SUPPORT
STRAIN-RELIEF, SECTOR COOLING TUBE

MICROFILMED:	DWG. TYPE	SHOWN ON	SCALE: 3.000	DO NOT SCALE PRINTS
	PART	21F409	SHEET 1 OF 1	
PATENT CLEAR:	DESIGN ACCT. NO.	CATEGORY CODE	DWG. NO. 21F3571	SIZE / REV. 1
	ON J.O.	AP6110		

Rev. 1/8/2001 ATLAS

Dwg. File: 21F357 Model File: 21F357

ITEM	PART NO	REQD	DESCRIPTION	MATERIAL
2	21F353	1	TUBE, SECTOR COOLING	ALUMINUM 3003
1	21F347	2	SECTOR COOLANT FITTING	6063 AL

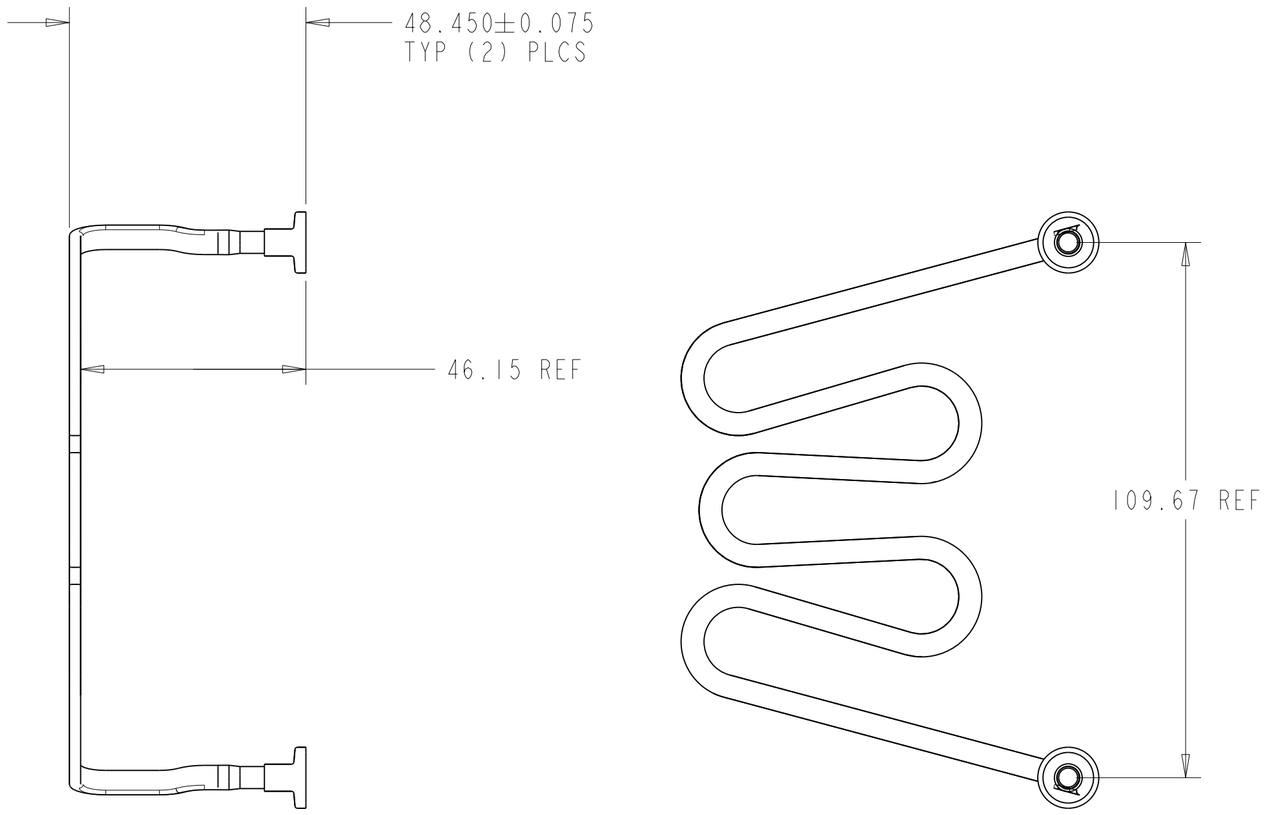

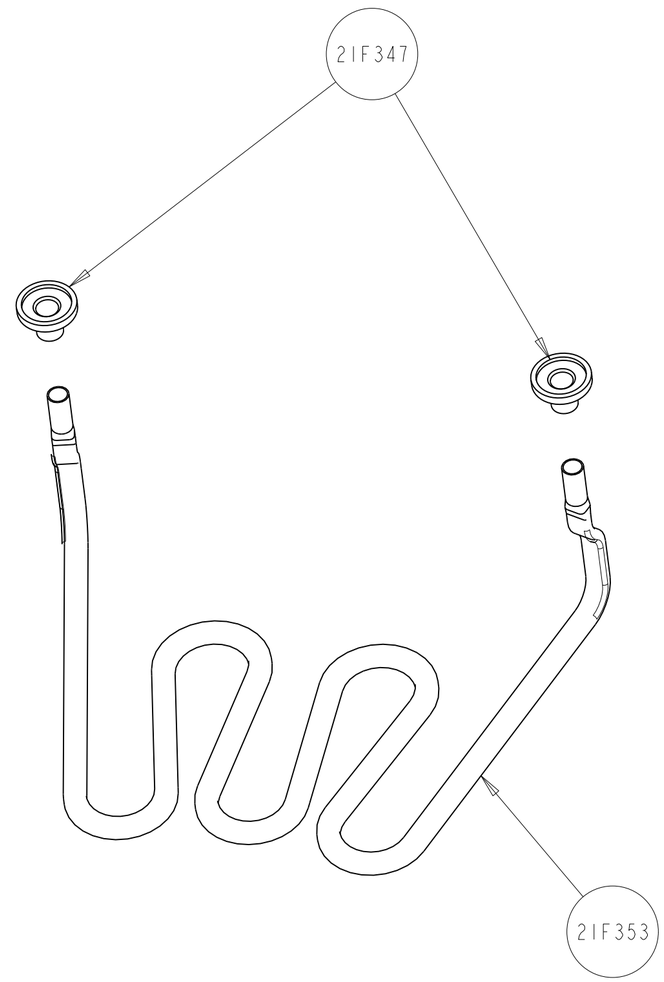

REV	DWG	CHK	ZONE	DATE	CHANGES

UNLESS OTHERWISE SPECIFIED

TOLERANCES: X.X ± 0.5 | FRAC. ± 1/64 | X.XX ± 0.05 | Angles ± 1.00° | X.XXX ± 0.010 | FINISH 125 √(μin)

DO NOT SCALE PRINT

THREADS ARE CLASS 2
CHAMFER ENDS OF ALL SCREW TREADS 30°
CUT ROUND, 1.5 THREAD RELIEF ON MACHINED THREADS
BREAK EDGES .016 MAX. ON MACHINED WORK
REMOVE BURRS, WELD SPLATTER & LOOSE SCALE
IN ACCORDANCE WITH ASME Y14.5M & B46.1

SHOP ORDERS

ACCT NO.	See J.O.	NO. REQD 60	SER NO. -
DEL TO	Jon Wirth		DATE ISSD -
SURFACE TREATMT			DATE REQD -
IDENT METHOD	TAG		
PROJECT NUMBER	ATL-IP-ED-0050		(logo)
PROJECT NAME			
DWG BY	D. UKEN		DATE 21-Jun-01
CHK BY	E. ANDERSSEN		DATE 22-JUN-01
APR BY	E. ANDERSSEN		DATE

ERNEST ORLANDO LAWRENCE
BERKELEY NATIONAL LABORATORY
UNIVERSITY OF CALIFORNIA - BERKELEY

ATLAS PIXEL DETECTOR
LOCAL SUPPORT DISK SECTORS
SECTOR TUBE WITH FITTINGS

MICROFILMED:	DWG. TYPE	SHOWN ON	SCALE: 1.000	DO NOT SCALE PRINTS
	ASSEM		SHEET 1 OF 1	
PATENT CLEAR:	DESIGN ACCT. NO.	CATEGORY CODE	DWG. NO.	SIZE / REV.
	PIAP-11	AP6110	21F4083	1

Dwg. File: 21F408 Model File: 21F408

DWG. NO. 21F4083 SIZE REV. 1 SH. 1

Rev. 1/8/2001 RJ/AS

DESCRIPTION	MATERIAL	MAT. LOCATION
	ALUMINUM 3003	-

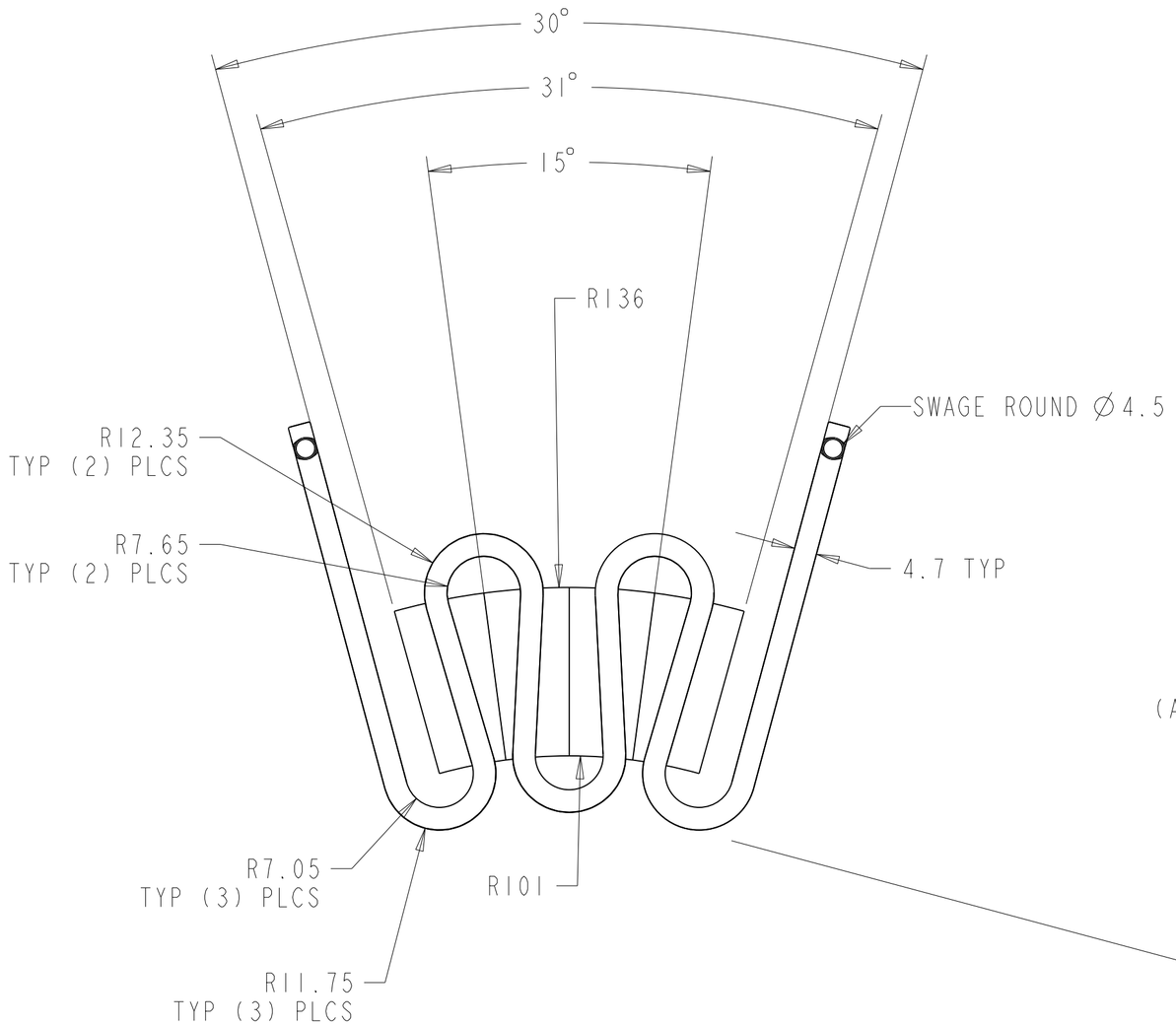

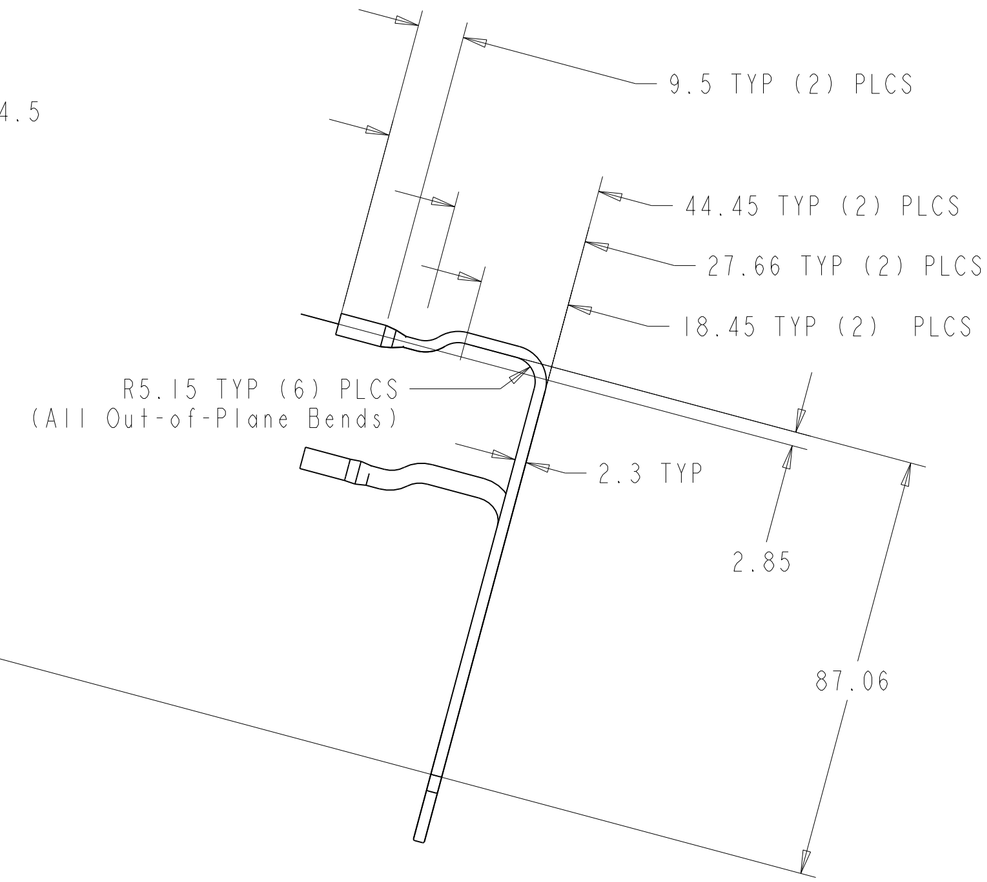

OVERALL LENGTH = 391.41 MM

REV	DWG	CHK	ZONE	DATE	CHANGES

UNLESS OTHERWISE SPECIFIED

TOLERANCES		
	X.X ± 0.1	FRAC. ± 1/64
	X.XX ± 0.03	Angles ± 1.00°
	X.XXX ± 0.010	FINISH 125 √(μin)

DO NOT SCALE PRINT

THREADS ARE CLASS 2
CHAMFER ENDS OF ALL SCREW TREADS 30°
CUT ROUND, 1.5 THREAD RELIEF ON MACHINED THREADS
BREAK EDGES .016 MAX. ON MACHINED WORK
REMOVE BURRS, WELD SPLATTER & LOOSE SCALE
IN ACCORDANCE WITH ASME Y14.5M & B46.1

SHOP ORDERS

ACCT NO.	See J.O.	NO. REQD 60	SER NO. -
DEL TO	Jon Wirth		DATE ISSD -
SURFACE TREATMT			DATE REQD -
IDENT METHOD	TAG		
PROJECT NUMBER	ATL-IP-ED-0051		US ATLAS SILICON SUBSYSTEM (logo)
PROJECT NAME	US ATLAS SILICON SUBSYSTEM		
DWG BY	D UKEN		DATE 18-FEB-01
CHK BY	J WIRTH		DATE 29_JUN-01
APR BY	E ANDERSSEN		DATE

ERNEST ORLANDO LAWRENCE BERKELEY NATIONAL LABORATORY
UNIVERSITY OF CALIFORNIA - BERKELEY

ATLAS PIXEL DETECTOR
DISK SECTOR, MODULE LOCAL SUPPORT
TUBE, SECTOR COOLING

MICROFILMED:	DWG. TYPE	SHOWN ON	SCALE: 1.000	DO NOT SCALE PRINTS
	PART	21F408	SHEET 1 OF 1	
PATENT CLEAR:	DESIGN ACCT. NO.	CATEGORY CODE	DWG. NO.	SIZE / REV.
	SEE J.O.	AP6110	21F3533	1

Dwg. File: 21F353 Model File: 21F353

DWG. NO. 21F3533 SIZE REV. 1 SH. 1

Rev. 1/8/2001 ATLAS

DWG. NO.	SIZE	REV.	SH.
21F3471		2	1

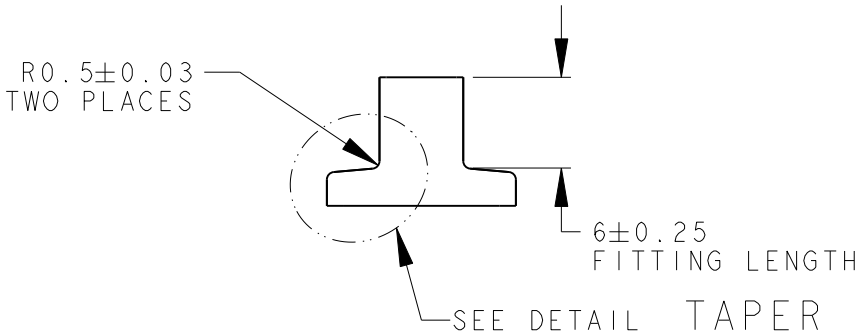

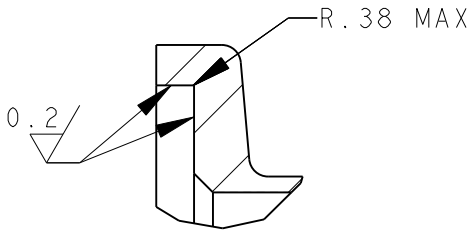

DETAIL GLAND
SCALE 5/1

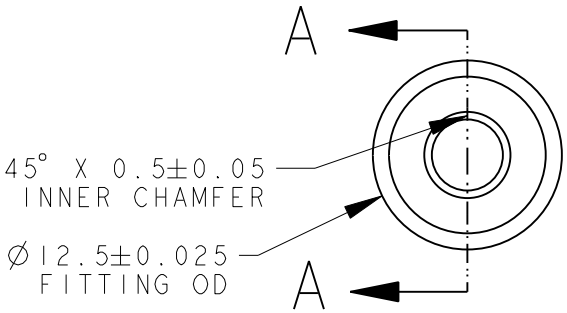

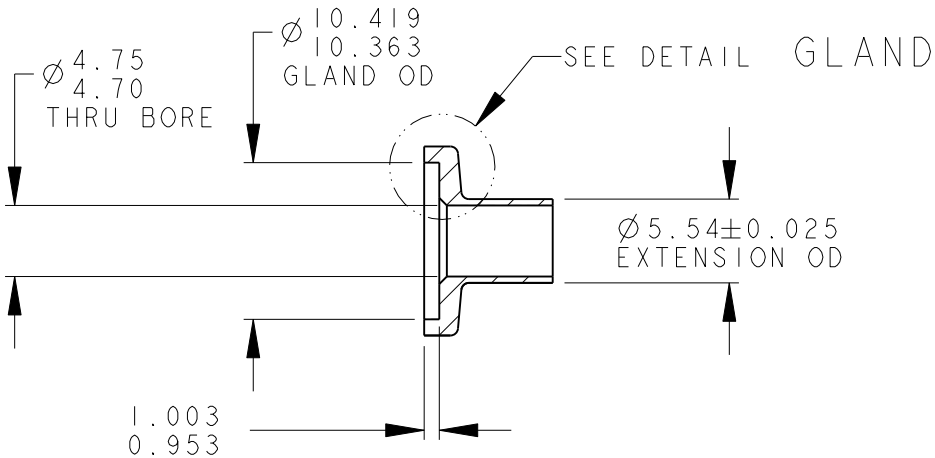

SECTION A - A

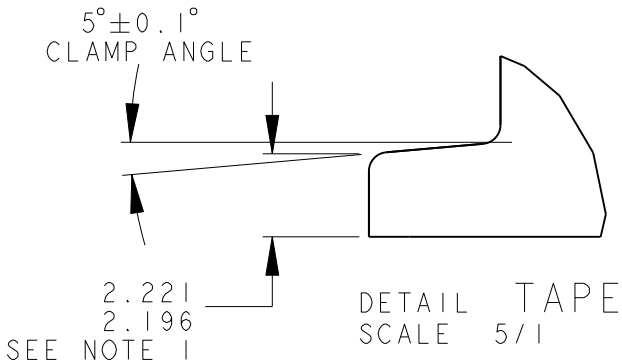

DETAIL TAPER
SCALE 5/1

NOTES:
1. TAPER POSITION IS DIMENTIONED TO OD OF FITTING PRIOR TO FILLETING.
2. SURFACE FINISH GIVEN IN MICRONS AVERAGE ROUGHNESS.
3. ALL DIMENSIONS IN MM.

REV	DWG	CHK	DATE	CHANGES	DESCRIPTION	6063 AL MATERIAL

UNLESS OTHERWISE SPECIFIED

TOLERANCES		
X.X ±0.1	FRAC. ±1/64	
X.XX ±0.03	Angles ±0.25°	
X.XXX ±0.015	FINISH 125 √(μin)	

DO NOT SCALE PRINT

THREADS ARE CLASS 2
CHAMFER ENDS OF ALL SCREW TREADS 30°
CUT ROUND, 1.5 THREAD RELIEF ON MACHINED THREADS
BREAK EDGES .016 MAX. ON MACHINED WORK
REMOVE BURRS, WELD SPLATTER & LOOSE SCALE
IN ACCORDANCE WITH ASME Y14.5M & B46.1

SHOP ORDERS

SER NO.	-		
ACCT NO.	SEE J.O.	NO. REQD	60
DATE ISSD	-		
DEL TO	J. S. WIRTH	DATE REQD	-
SURFACE TREATMT	DEGREASE		
IDENT METHOD	TAG		
PROJECT NUMBER	ATL-IP-ED-0052		
PROJECT NAME	US ATLAS SILICON SUBSYSTEM		
DWG BY	N. HARTMAN	DATE	01-Mar-01
CHK BY	E. ANDERSSEN	DATE	07-MAR-01
APR BY	E. ANDERSSEN	DATE	

ERNEST ORLANDO LAWRENCE BERKELEY NATIONAL LABORATORY
UNIVERSITY OF CALIFORNIA - BERKELEY

ATLAS PIXEL DETECTOR
COOLING SERVICES
SECTOR COOLANT FITTING

MICROFILMED:	DWG. TYPE	SHOWN ON	SCALE: 2/1	DO NOT SCALE PRINTS
	PART		SHEET 1 OF 1	

PATENT CLEAR:	DESIGN ACCT. NO.	CATEGORY CODE	DWG. NO.	SIZE	REV.
	P1AP11	AP8220	21F3471		2

Dwg. File: SECTOR_COOLANT_FITTINGS Model File: SECTOR_END_FITTING

Rev. 1/8/2001 ATLAS