DESCRIPTION	MATERIAL	MAT. LOCATION
	ALUMINUM 3003	-

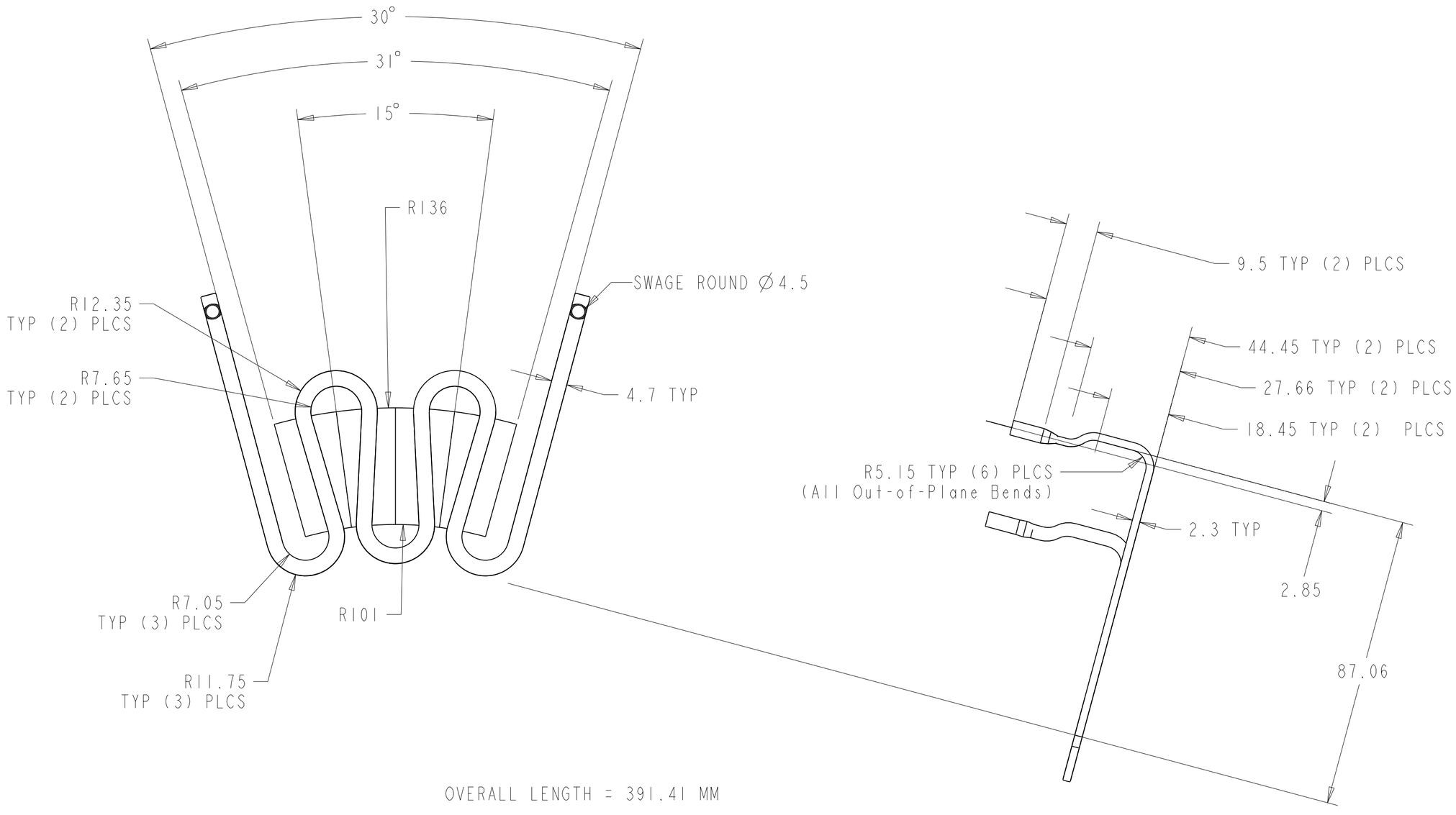

REV	DWG	CHK	ZONE	DATE	CHANGES

UNLESS OTHERWISE SPECIFIED

TOLERANCES		
	X.X ± 0.1	FRAC. ± 1/64
	X.XX ± 0.03	Angles ± 1.00°
	X.XXX ± 0.010	FINISH 125 (μin)

DO NOT SCALE PRINT

THREADS ARE CLASS 2
CHAMFER ENDS OF ALL SCREW TREADS 30°
CUT ROUND, 1.5 THREAD RELIEF ON MACHINED THREADS
BREAK EDGES .016 MAX. ON MACHINED WORK
REMOVE BURRS, WELD SPLATTER & LOOSE SCALE
IN ACCORDANCE WITH ASME Y14.5M & B46.1

SHOP ORDERS

ACCT NO.	SEE J.O.	NO. REQD	60
DEL TO	J WIRTH		
SURFACE TREATMT	PARYLENE COAT		
IDENT METHOD	TAG		
PROJECT NUMBER	ATL-IP-ED-0051		
PROJECT NAME	US ATLAS SILICON SUBSYSTEM		
DWG BY	D UKEN	DATE	29-Jun-01
CHK BY	J WIRTH	DATE	18-FEB-01
APR BY	E ANDERSSEN	DATE	18-FEB-01

SER NO. -
DATE ISSD -
DATE REQD -

US ATLAS SILICON SUBSYSTEM (logo)

ERNEST ORLANDO LAWRENCE BERKELEY NATIONAL LABORATORY
UNIVERSITY OF CALIFORNIA - BERKELEY

ATLAS PIXEL DETECTOR
DISK SECTOR, MODULE LOCAL SUPPORT
TUBE, SECTOR COOLING

MICROFILMED:	DWG. TYPE	SHOWN ON	SCALE: 1.000	DO NOT SCALE PRINTS
	PART	21F350	SHEET 1 OF 1	
PATENT CLEAR:	DESIGN ACCT. NO.	CATEGORY CODE	DWG. NO. 21F3533	SIZE / REV. 1
	SEE J.O.	AP6110		

DWG. NO. 21F3533 SIZE REV. 1 SH. 1

Dwg. File: 21F353 Model File: 21F353