| ITEM | PART NO | REQD | DESCRIPTION | MATERIAL |
|---|---|---|---|---|
| 4 | | 2 | | AIT CGL 7018 LV-XF (3% 0.75 μ glass beads) |
| 3 | 21F357 | 2 | STRAIN-RELIEF, SECTOR COOLING TUBE | ALUMINUM 6061 T6 |
| 2 | 21F353 | 1 | TUBE, SECTOR COOLING | ALUMINUM 3003 |
| 1 | 21F347 | 2 | SECTOR COOLANT FITTING | 6063 AL |

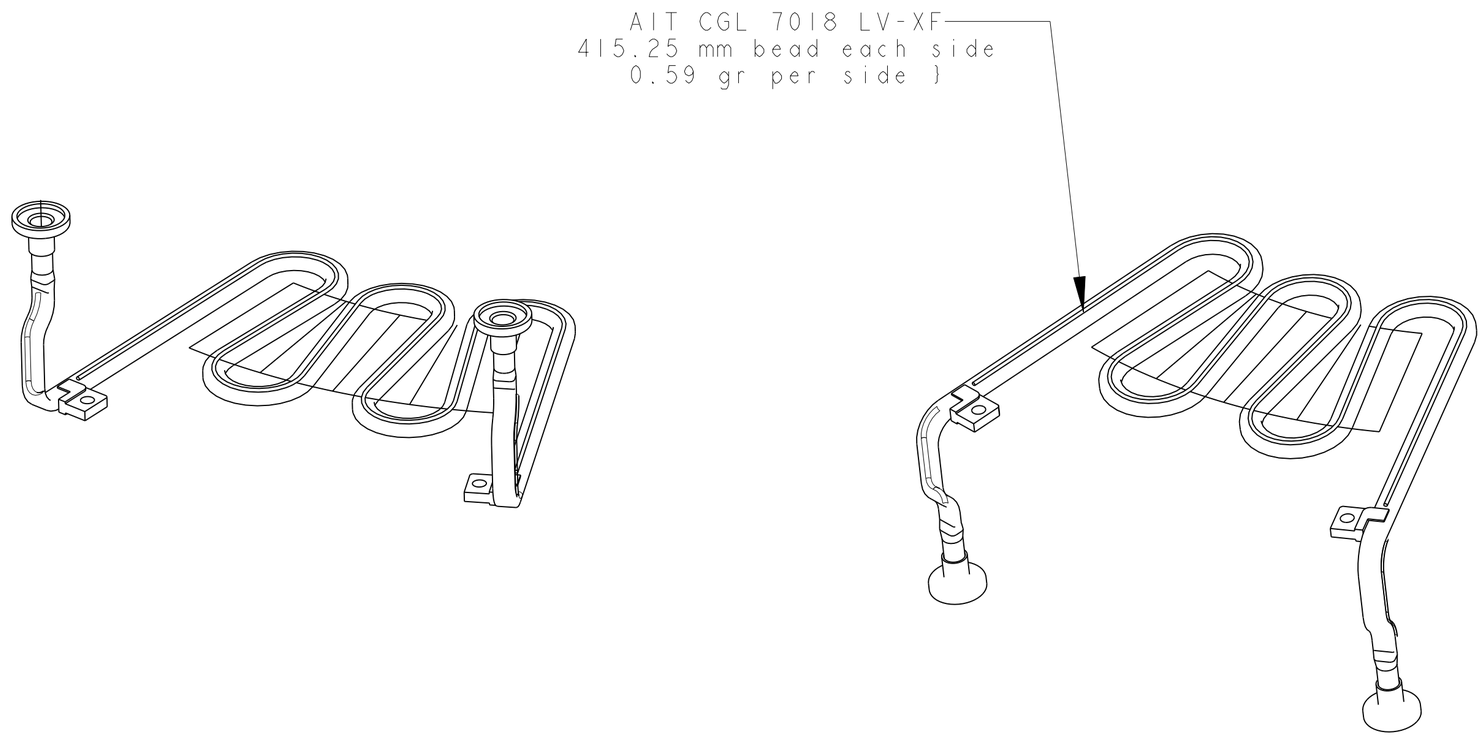


| REV | DWG | CHK | ZONE | DATE | CHANGES |
|---|---|---|---|---|---|

UNLESS OTHERWISE SPECIFIED

| TOLERANCES | | |
|---|---|---|
| | X.X ± 0.5 | FRAC. ± 1/64 |
| | X.XX ± 0.05 | Angles ± 1.00° |
| | X.XXX ± 0.010 | FINISH 125 (μin) |

DO NOT SCALE PRINT

THREADS ARE CLASS 2
CHAMFER ENDS OF ALL SCREW TREADS 30°
CUT ROUND, 1.5 THREAD RELIEF ON MACHINED THREADS
BREAK EDGES .016 MAX. ON MACHINED WORK
REMOVE BURRS, WELD SPLATTER & LOOSE SCALE
IN ACCORDANCE WITH ASME Y14.5M & B46.1

**SHOP ORDERS**

| | | | |
|---|---|---|---|
| ACCT NO. | See J.O. | NO. REQD | |
| DEL TO | Jon Wirth | | |
| SURFACE TREATMT | | | |
| IDENT METHOD | TAG | | |
| PROJECT NUMBER | ATL-IP-ED-0046 | | (logo) |
| PROJECT NAME | | | |
| DWG BY | Jon Wirth | DATE | 03-Jul-01 |
| CHK BY | E. ANDERSSEN | DATE | 3-JUL-01 |
| APR BY | E. ANDERSSEN | DATE | |

SER NO. -
DATE ISSD -
DATE REQD -

**ERNEST ORLANDO LAWRENCE BERKELEY NATIONAL LABORATORY**
UNIVERSITY OF CALIFORNIA - BERKELEY

ATLAS PIXEL DETECTOR
LOCAL SUPPORT DISK SECTORS
Sector Cooling Tube with CGL 7018 LV-XF

| MICROFILMED: | DWG. TYPE | SHOWN ON | SCALE: 1/1 | DO NOT SCALE PRINTS |
|---|---|---|---|---|
| | ASSEM | | SHEET 2 OF 2 | |
| PATENT CLEAR: | DESIGN ACCT. NO. | CATEGORY CODE | DWG. NO. 21F4713 | SIZE / REV. 1 |
| | PIAP-11 | AP6110 | | |

DWG. NO. 21F4713 SIZE REV. 1 SH. 2

Dwg. File: 21F471 Model File: 21F471

Rev. 1/8/2001 ATLAS