DWG. NO.	SIZE	REV.	SH.
21F4704	1	1	1

ITEM	PART NO	REQD	DESCRIPTION	MATERIAL
6	21F460		FIXTURE FOR APPLICATION OF CGL TO SECTOR TUBE	-
5	21F357		STRAIN-RELIEF, SECTOR COOLING TUBE	ALUMINUM 6061 T6
4	21F357		STRAIN-RELIEF, SECTOR COOLING TUBE	ALUMINUM 6061 T6
3	21F347		SECTOR COOLANT FITTING	6063 AL
2	21F347		SECTOR COOLANT FITTING	6063 AL
1	21F353		TUBE, SECTOR COOLING	ALUMINUM 3003

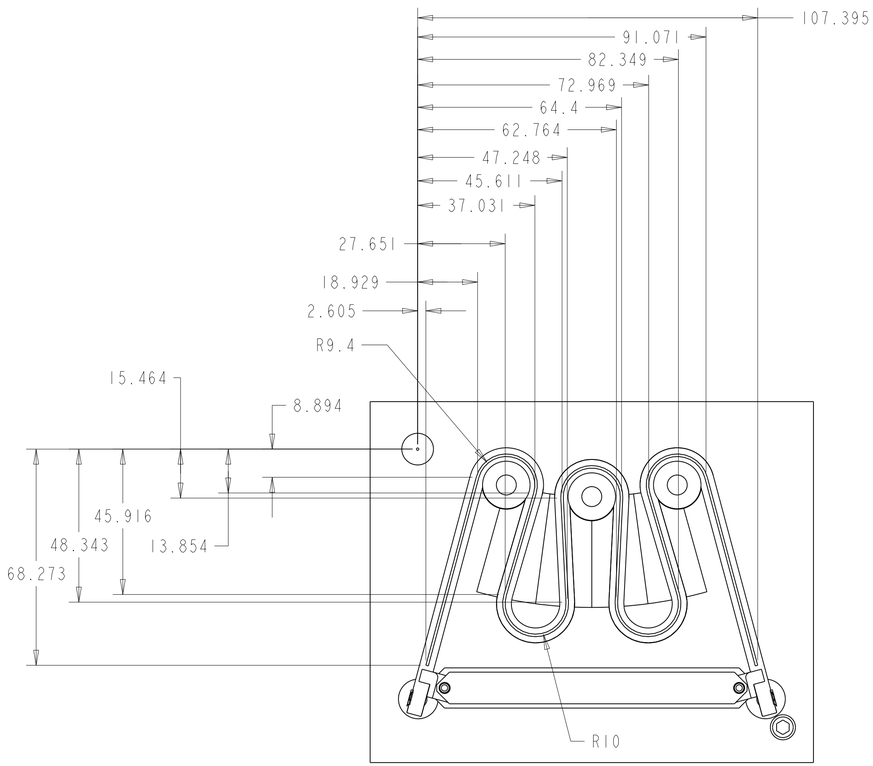

SEGMENT ENDPOINTS OF CGL BEAD
RELATIVE TO SYRINGE LOCATING POST

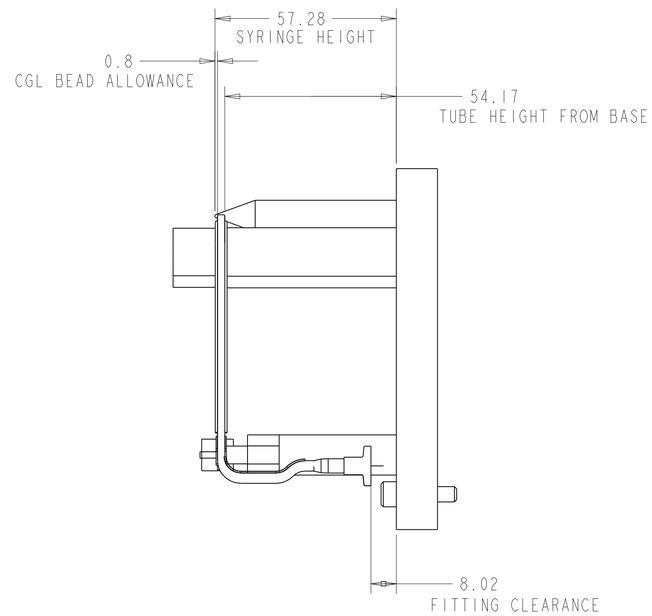

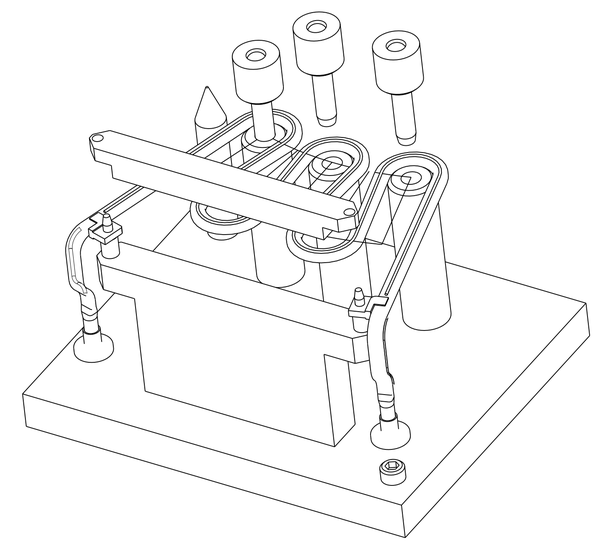

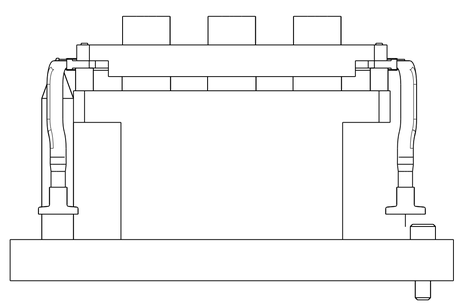

REV	DWG	CHK	ZONE	DATE	CHANGES

UNLESS OTHERWISE SPECIFIED

TOLERANCES: X.X ± 0.5 | FRAC. ± 1/64 | X.XX ± 0.05 | Angles ± 1.00° | X.XXX ± 0.010 | FINISH 125 √(μin)

DO NOT SCALE PRINT

THREADS ARE CLASS 2
CHAMFER ENDS OF ALL SCREW TREADS 30°
CUT ROUND, 1.5 THREAD RELIEF ON MACHINED THREADS
BREAK EDGES .016 MAX. ON MACHINED WORK
REMOVE BURRS, WELD SPLATTER & LOOSE SCALE
IN ACCORDANCE WITH ASME Y14.5M & B46.1

SHOP ORDERS

ACCT NO.	See J.O.	NO. REQD	
DEL TO	Jon Wirth		
SURFACE TREATMT			
IDENT METHOD	TAG		
PROJECT NUMBER	ATL-IP-ED-0047		
PROJECT NAME			
DWG BY	N. HARTMAN	DATE	05-Jun-01
CHK BY	E. ANDERSSEN	DATE	11-JUN-01
APR BY	E. ANDERSSEN	DATE	

SER NO. -
DATE ISSD -
DATE REQD -

ERNEST ORLANDO LAWRENCE
BERKELEY NATIONAL LABORATORY
UNIVERSITY OF CALIFORNIA - BERKELEY

ATLAS PIXEL DETECTOR
LOCAL SUPPORT DISK SECTORS
SECTOR COOLING TUBE CGL APPLICATION LAYOUT

MICROFILMED:	DWG. TYPE	SHOWN ON	SCALE: 1.000	DO NOT SCALE PRINTS
	ASSEM		SHEET 1 OF 1	
PATENT CLEAR:	DESIGN ACCT. NO.	CATEGORY CODE	DWG. NO.	SIZE / REV.
	PIAPII	AP6110	21F4704	1

Dwg. File: 21F4704.Model File: 21F4704