DESCRIPTION	MATERIAL	MAT. LOCATION
-	-	-

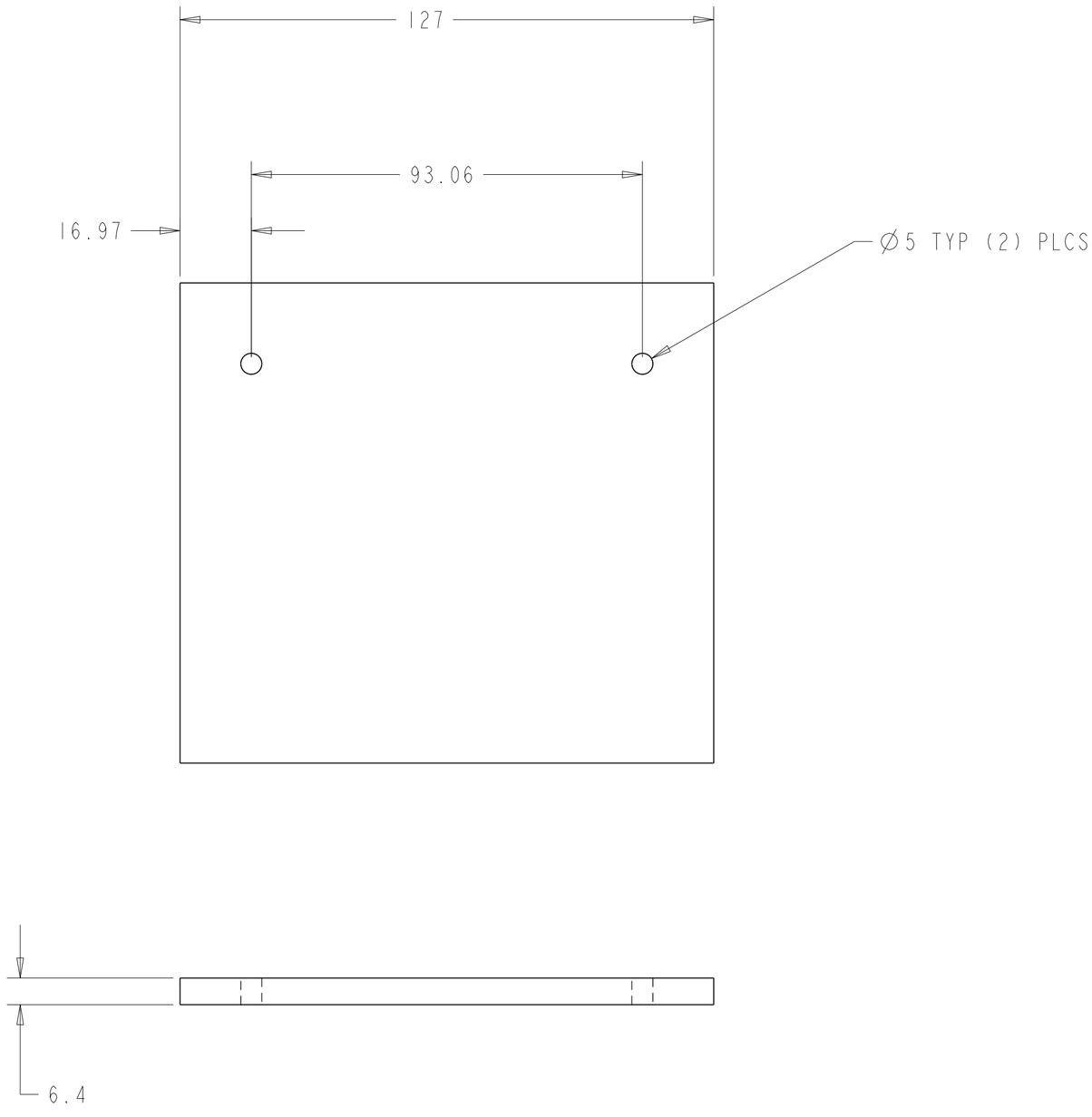

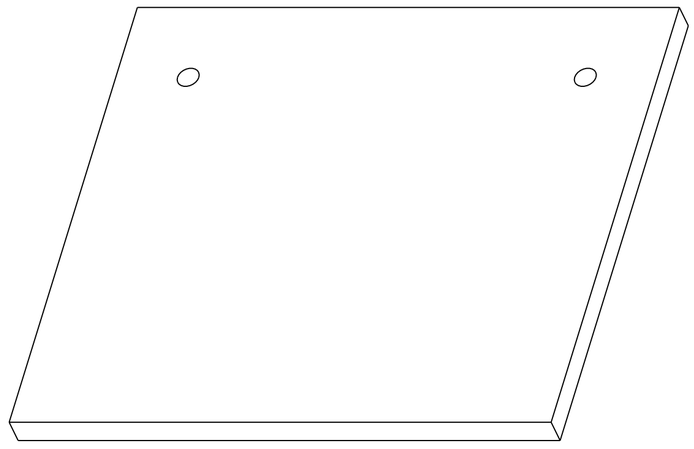

REV	DWG	CHK	ZONE	DATE	CHANGES

UNLESS OTHERWISE SPECIFIED

TOLERANCES		
	X.X ± 0.5	FRAC. ± 1/64
	X.XX ± 0.05	Angles ± 1.00°
	X.XXX ± 0.010	FINISH 125 (μin)

DO NOT SCALE PRINT

THREADS ARE CLASS 2
CHAMFER ENDS OF ALL SCREW TREADS 30°
CUT ROUND, 1.5 THREAD RELIEF ON MACHINED THREADS
BREAK EDGES .016 MAX. ON MACHINED WORK
REMOVE BURRS, WELD SPLATTER & LOOSE SCALE
IN ACCORDANCE WITH ASME Y14.5M & B46.1

SHOP ORDERS

ACCT NO.	See J.O.	NO. REQD	60
DEL TO	Jon Wirth		
SURFACE TREATMT	-		
IDENT METHOD	TAG		
PROJECT NUMBER	ATL-IP-ED-0038		
PROJECT NAME	US ATLAS SILICON SUBSYSTEM		
DWG BY	J WIRTH	DATE	19-JUN-01
CHK BY	ANDERSSEN	DATE	22-JUN_01
APR BY	ANDERSSEN	DATE	

SER NO.	-
DATE ISSD	-
DATE REQD	-

US ATLAS SILICON SUBSYSTEM (logo)

ERNEST ORLANDO LAWRENCE BERKELEY NATIONAL LABORATORY
UNIVERSITY OF CALIFORNIA - BERKELEY

ATLAS PIXEL DETECTOR
DISK SECTOR, MODULE LOCAL SUPPORT
SECTOR FOAM BLANK

MICROFILMED:	DWG. TYPE	SHOWN ON	SCALE: 1.000	DO NOT SCALE PRINTS
	PART		SHEET 1 OF 1	
PATENT CLEAR:	DESIGN ACCT. NO.	CATEGORY CODE	DWG. NO. SIZE	REV.
	PIAP-11	AP6110	21F416-03	1

DWG. NO. 21F416-03 SIZE REV. 1 SH. 1

Dwg. File: 21F416-0 Model File: 21F416-0

Rev. 1/8/2001 ATLAS