ITEM	PART NO	REQD	DESCRIPTION	MATERIAL
3	21F416-3		SECTOR FOAM COMPLETE	Allcomp CVD'ed RVC Foam
2	21f425		CYANATE ESTER FOR FOAM	BRYTE E01189-2M
1	21F354		FACING, SECTOR MOUNTSIDE	P30 CARBON-CARBON

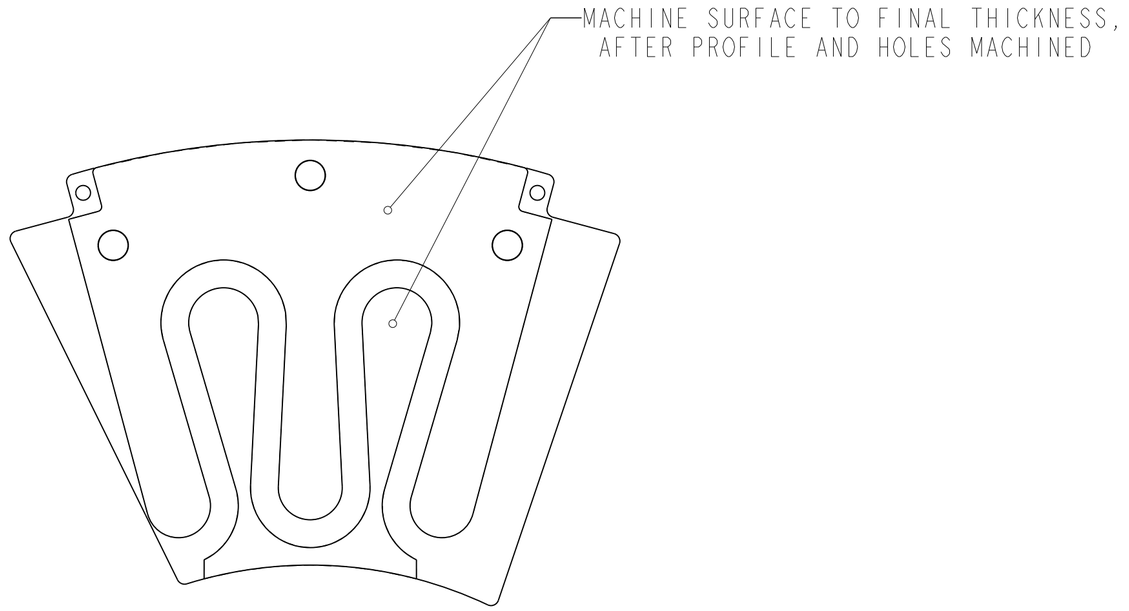

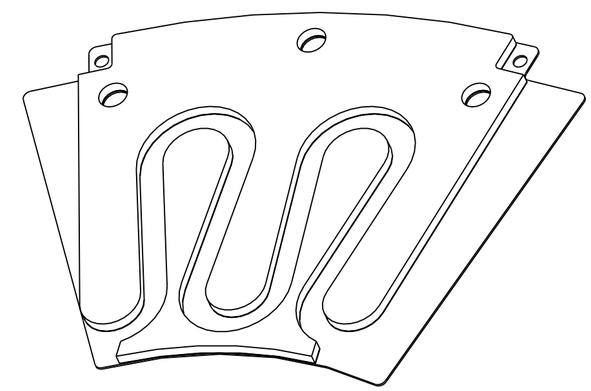

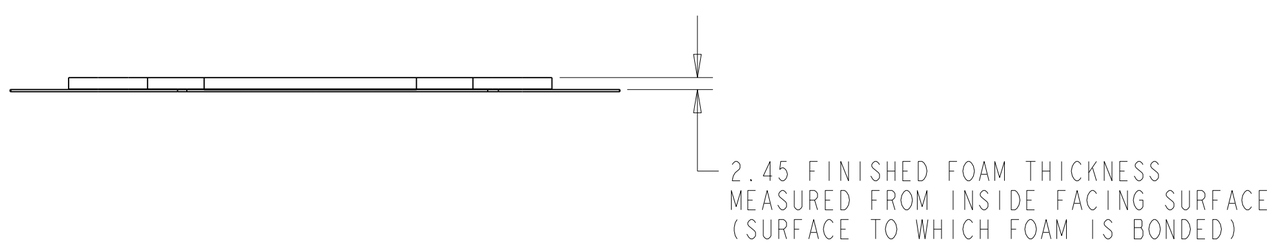

REV	DWG	CHK	ZONE	DATE	CHANGES

UNLESS OTHERWISE SPECIFIED

TOLERANCES			
	X.X ± 0.5	FRAC. ± 1/64	
	X.XX ± 0.05	Angles ± 1.00°	
	X.XXX ± 0.010	FINISH 125 √(μin)	

DO NOT SCALE PRINT

THREADS ARE CLASS 2
CHAMFER ENDS OF ALL SCREW TREADS 30°
CUT ROUND, 1.5 THREAD RELIEF ON MACHINED THREADS
BREAK EDGES .016 MAX. ON MACHINED WORK
REMOVE BURRS, WELD SPLATTER & LOOSE SCALE
IN ACCORDANCE WITH ASME Y14.5M & B46.1

SHOP ORDERS

ACCT NO.	See J.O.	NO. REQD 60	SER NO. -
DEL TO	Jon Wirth		DATE ISSD -
SURFACE TREATMT	-		DATE REQD -
IDENT METHOD	TAG		
PROJECT NUMBER	ATL-IP-ED-0037		US ATLAS SILICON SUBSYSTEM (logo)
PROJECT NAME	US ATLAS SILICON SUBSYSTEM		
DWG BY	J WIRTH		DATE 20-Jun-01
CHK BY	E ANDERSSEN		DATE 21-JUN-01
APR BY	E ANDERSSEN		DATE

ERNEST ORLANDO LAWRENCE BERKELEY NATIONAL LABORATORY
UNIVERSITY OF CALIFORNIA - BERKELEY

ATLAS PIXEL DETECTOR
DISK SECTOR, MODULE LOCAL SUPPORT
FINISHED MOUNTSIDE FACING ASSEMBLY

MICROFILMED:	DWG. TYPE	SHOWN ON	SCALE: 1.000	DO NOT SCALE PRINTS
	ASSEM	21f410	SHEET 1 OF 1	
PATENT CLEAR:	DESIGN ACCT. NO.	CATEGORY CODE	DWG. NO.	SIZE / REV.
	PIAP-II	AP6110	21F4043	1

Dwg. file: 21F404 Model file: 21F404

Rev 1/8/2001 XLAS

DWG. NO. 21F4043 SIZE REV. 1 SH. 1