ITEM	PART NO	REQD	DESCRIPTION	MATERIAL
3	21F416-1		SECTOR FOAM FACED	-
2	21f425		CYANATE ESTER FOR FOAM	BRYTE E01189-2M
1	21F355		FACING, SECTOR NON-MOUNTSIDE	P30 CARBON-CARBON

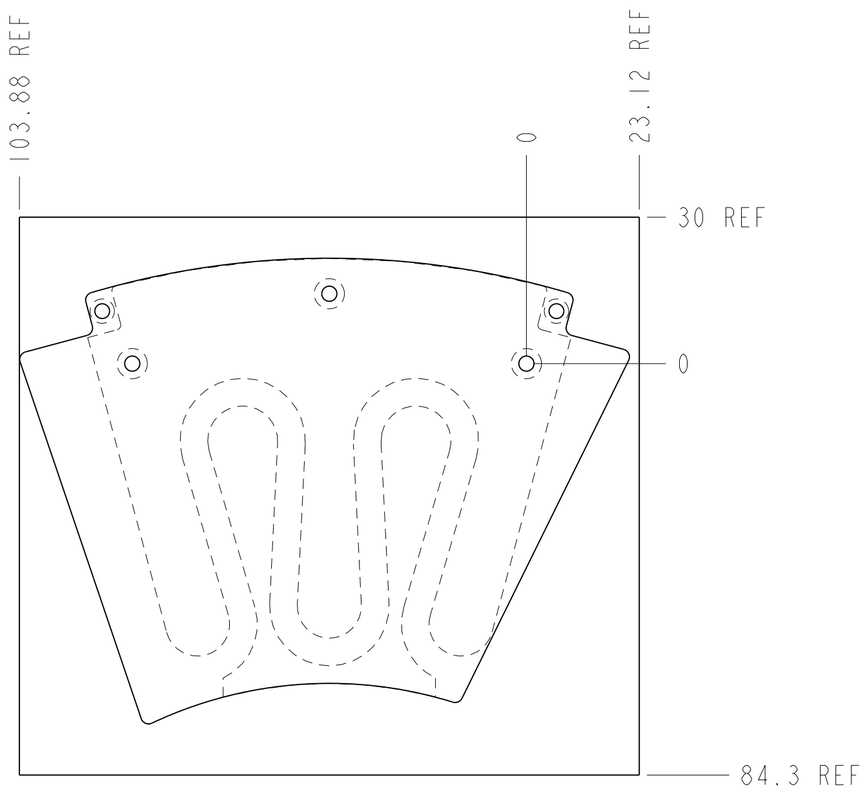

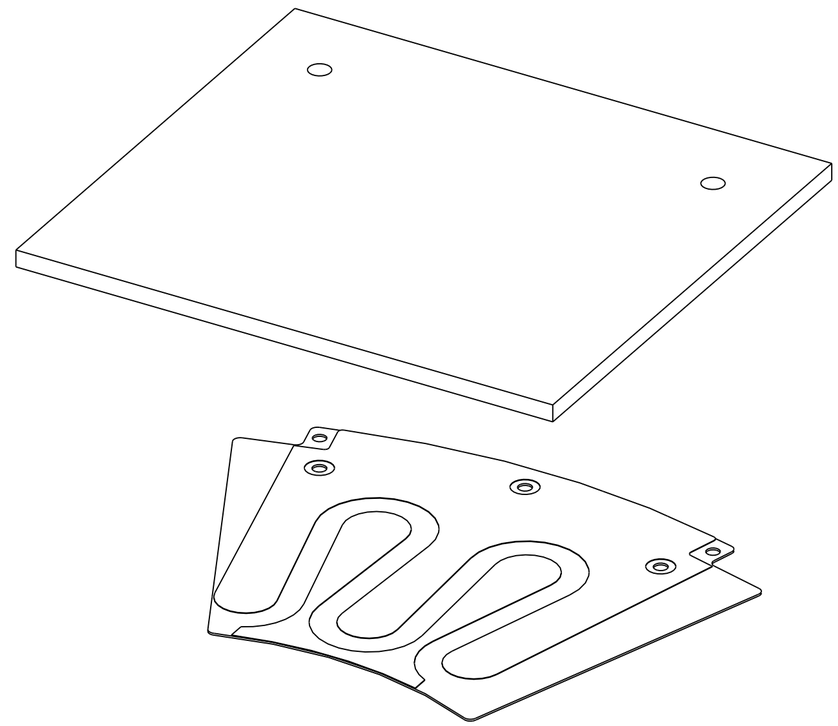

4 REF FOAM THICKNESS, MACHINED PRIOR TO BONDNG PROCESS

4.44 TOTAL THICKNESS AFTER FOAM IS BONDED TO SECTOR FACING

REV	DWG	CHK	ZONE	DATE	CHANGES

UNLESS OTHERWISE SPECIFIED

TOLERANCES: X.X ± 0.5 | FRAC. ± 1/64 | X.XX ± 0.05 | Angles ± 1.00° | X.XXX ± 0.010 | FINISH 125 √(μin)

DO NOT SCALE PRINT

THREADS ARE CLASS 2
CHAMFER ENDS OF ALL SCREW TREADS 30°
CUT ROUND, 1.5 THREAD RELIEF ON MACHINED THREADS
BREAK EDGES .016 MAX. ON MACHINED WORK
REMOVE BURRS, WELD SPLATTER & LOOSE SCALE
IN ACCORDANCE WITH ASME Y14.5M & B46.1

SHOP ORDERS

ACCT NO.	See J.O.	NO. REQD	60
DEL TO	Jon Wirth		
SURFACE TREATMT	-		
IDENT METHOD	TAG		
PROJECT NUMBER	ATL-IP-ED-0041		
PROJECT NAME	US ATLAS SILICON SUBSYSTEM		
DWG BY	J WIRTH	DATE	19-JUN-01
CHK BY	E ANDERSSEN	DATE	22-JUN-01
APR BY	E ANDERSSEN	DATE	

SER NO. -
DATE ISSD -
DATE REQD -

US ATLAS SILICON SUBSYSTEM (logo)

ERNEST ORLANDO LAWRENCE BERKELEY NATIONAL LABORATORY
UNIVERSITY OF CALIFORNIA - BERKELEY

ATLAS PIXEL DETECTOR
DISK SECTOR, MODULE LOCAL SUPPORT
SECTOR FACING WITH FOAM BLANK

MICROFILMED:	DWG. TYPE	SHOWN ON	SCALE: 1.000	DO NOT SCALE PRINTS
	ASSEM		SHEET 1 OF 1	
PATENT CLEAR:	DESIGN ACCT. NO.	CATEGORY CODE	DWG. NO.	SIZE / REV.
	PIAP-11	AP6110	21F4023	1

Dwg. File: 21F402 Model File: 21F402

DWG. NO. 21F4023 SIZE REV. 1 SH. 1

Rev. 1/02/00 RJ/AS