FABRICATION PROCESS	MATERIAL	MATERIAL LOCATION

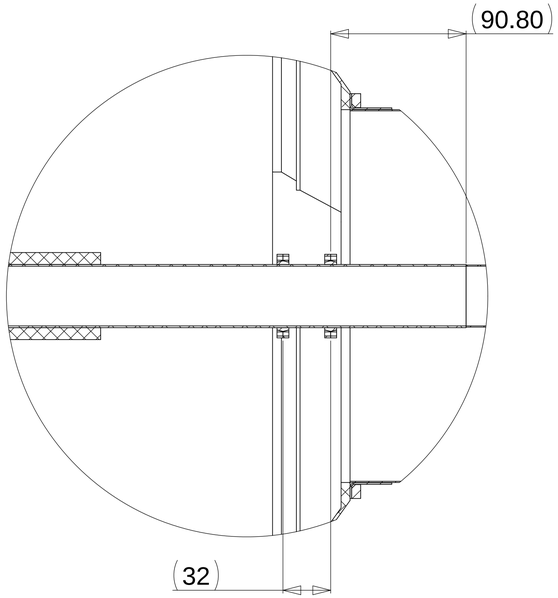

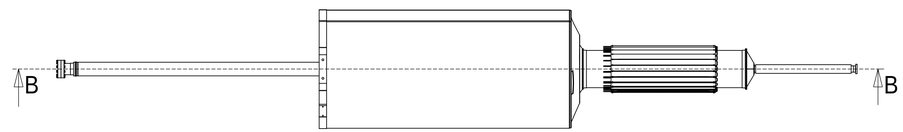

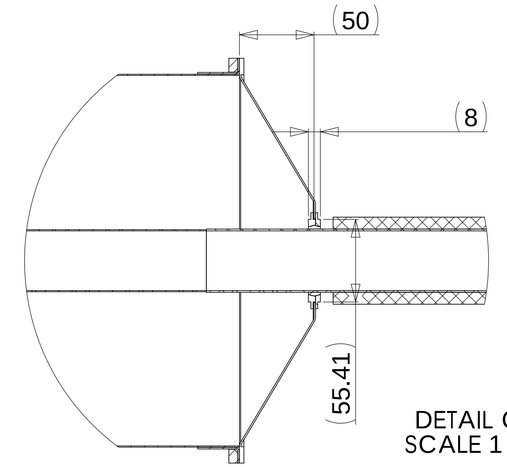

DETAIL C
SCALE 1 : 2

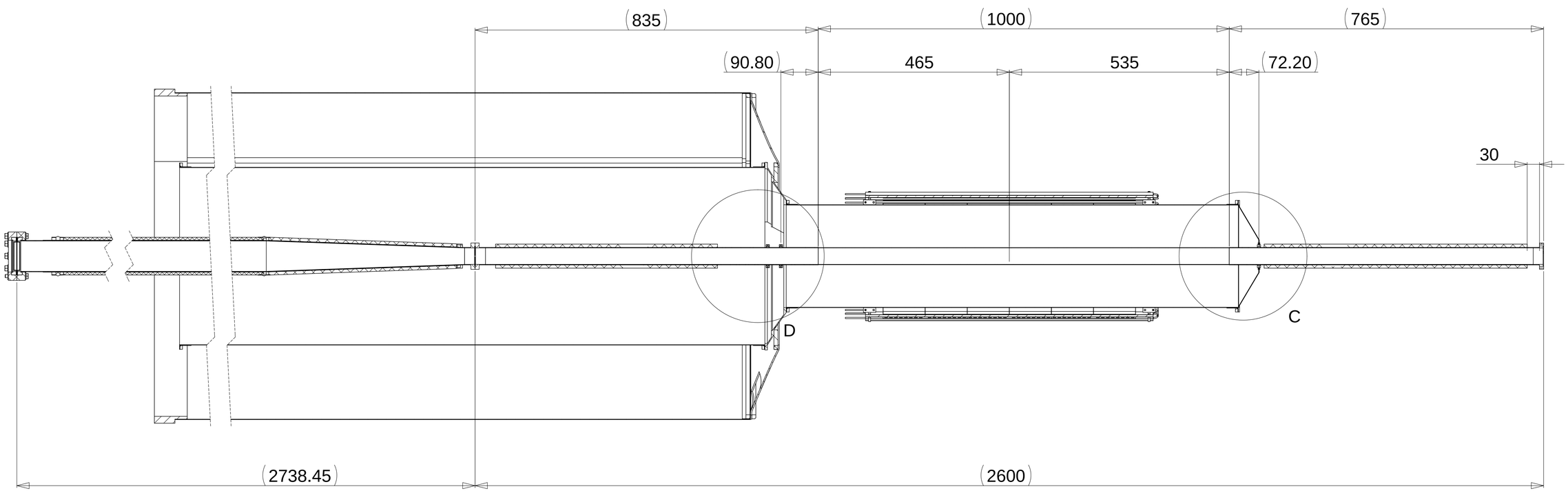

REV	DWG	CHK	ZONE	DATE	CHANGES

UNLESS OTHERWISE SPECIFIED

TOLERANCES		
	X.X ± 0.5	FRAC. ± 1/64
	X.XX ± 0.05	Angles ± 1.00°
	X.XXX ± 0.010	FINISH

DO NOT SCALE PRINT

THREADS ARE CLASS 2

CHAMFER ENDS OF ALL SCREW THREADS 30°

CUT ROUND, 1.5 THREAD RELIEF ON MACHINED THREADS

BREAK EDGES .016 MAX. ON MACHINED WORK

REMOVE BURRS, WELD SPLATTER & LOOSE SCALE

IN ACCORDANCE WITH ASME Y14.5M & B46.1

SHOP ORDERS

NO. REQ'D		SER NO.	–
ACCT NO.		DATE ISSD	–
DEL TO		DATE REQ'D	–
SURFACE TREATMT	–		
IDENT METHOD			
PROJECT NUMBER			
PROJECT NAME			
DWG BY		DATE	
CHK BY		DATE	
APR BY		DATE	

ERNEST ORLANDO LAWRENCE BERKELEY NATIONAL LABORATORY
UNIVERSITY OF CALIFORNIA - BERKELEY

MICROFILMED:	DWG. TYPE		SCALE: 1:50	DO NOT SCALE PRINTS
		SHOWN ON	SHEET 1 OF 1	
PATENT CLEAR:	DESIGN ACCT. NO.	CATEGORY CODE	DWG. NO.	SIZE / REV.