DWG. NO.	SIZE	REV.	SH.
nnXnnn4			1

ITEM	PART NO	REQD	DESCRIPTION	MATERIAL
3	nnXnnn		THIRD LINE TITLE	-
2	nnXnnn		THIRD LINE TITLE	-
1	21F565		ENDPLATE STIFFENER INTERFACE DRAWING	-

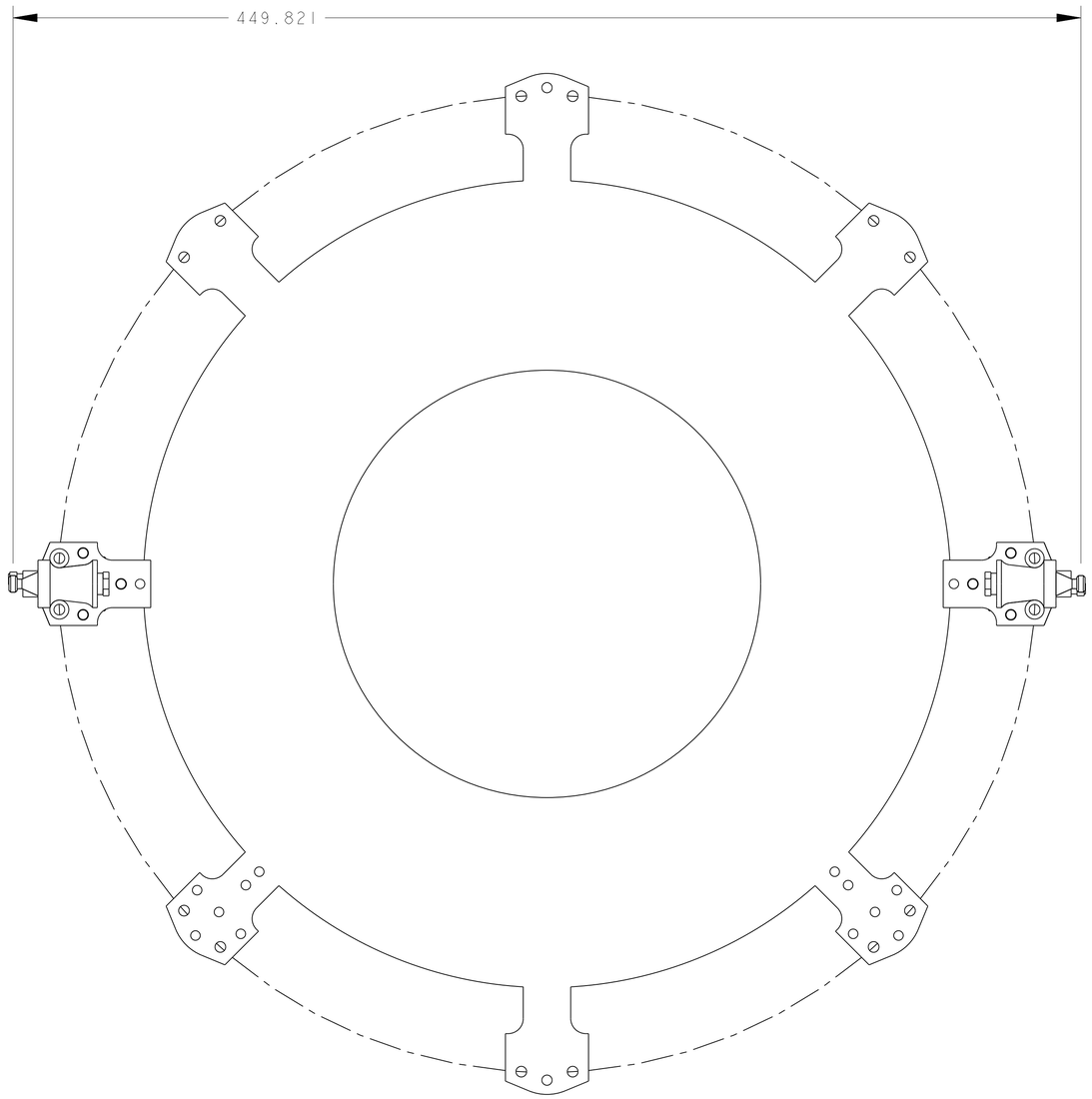

SCALE 3/4

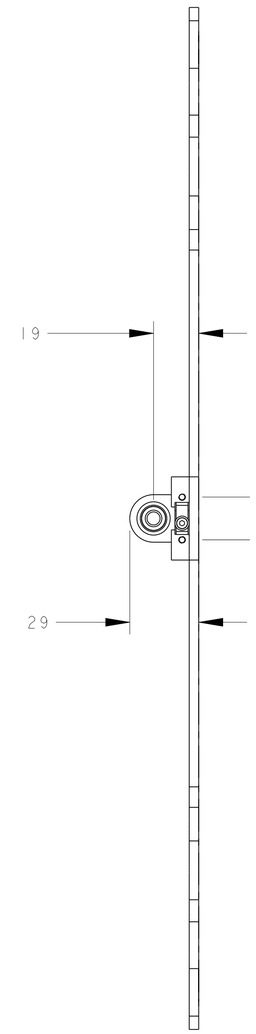

REV	DWG	CHK	ZONE	DATE	CHANGES

UNLESS OTHERWISE SPECIFIED

TOLERANCES		
	X.X ± 0.5	FRAC. ± 1/64
	X.XX ± 0.05	Angles ± 1.00°
	X.XXX ± 0.010	FINISH 125 √(μin rms)

DO NOT SCALE PRINT

THREADS ARE CLASS 2
CHAMFER ENDS OF ALL SCREW TREADS 30°
CUT ROUND, 1.5 THREAD RELIEF ON MACHINED THREADS
BREAK EDGES .016 MAX. ON MACHINED WORK
REMOVE BURRS, WELD SPLATTER & LOOSE SCALE
IN ACCORDANCE WITH ASME Y14.5M & B46.1

SHOP ORDERS

ACCT NO.	NO. REQD	SER NO.	-
DEL TO		DATE ISSD	-
SURFACE TREATMT	-	DATE REQD	-
IDENT METHOD	TAG		
PROJECT NUMBER	N/A		
PROJECT NAME	N/A		
DWG BY	Unknown	DATE	16-May-02
CHK BY	None	DATE	
APR BY	None	DATE	

ERNEST ORLANDO LAWRENCE BERKELEY NATIONAL LABORATORY
UNIVERSITY OF CALIFORNIA - BERKELEY

FIRST LINE TITLE
SECOND LINE TITLE
THIRD LINE TITLE

MICROFILMED:	DWG. TYPE	SHOWN ON	SCALE: 33/100	DO NOT SCALE PRINTS
	AnSnSVEnMn	nnXnnn	nnXn SHEET 1 OF 1	
PATENT CLEAR:	DESIGN ACCT. NO.	CATEGORY CODE	DWG. NO.	SIZE / REV.
	XXXX-XX	XXnnnn	nnXnnn4	

Dwg__Fin__MOUNT_INTERFACE_SIDE_C Model_Fin__ENDPLATE_W_MOUNTS