DWG. NO.	SIZE	REV.	SH.
2501224		1	1

ITEM	PART NO	REQD	DESCRIPTION	MATERIAL
3	250116		FORWARD FLANGE ASSEMBLY	
2	250005		PPI FLANGE ASSEMBLY	
1	250118		FORWARD SHELL LAMINATE	

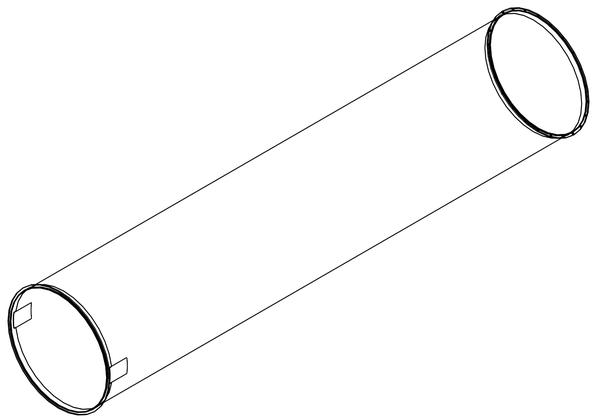

SCALE 1/10

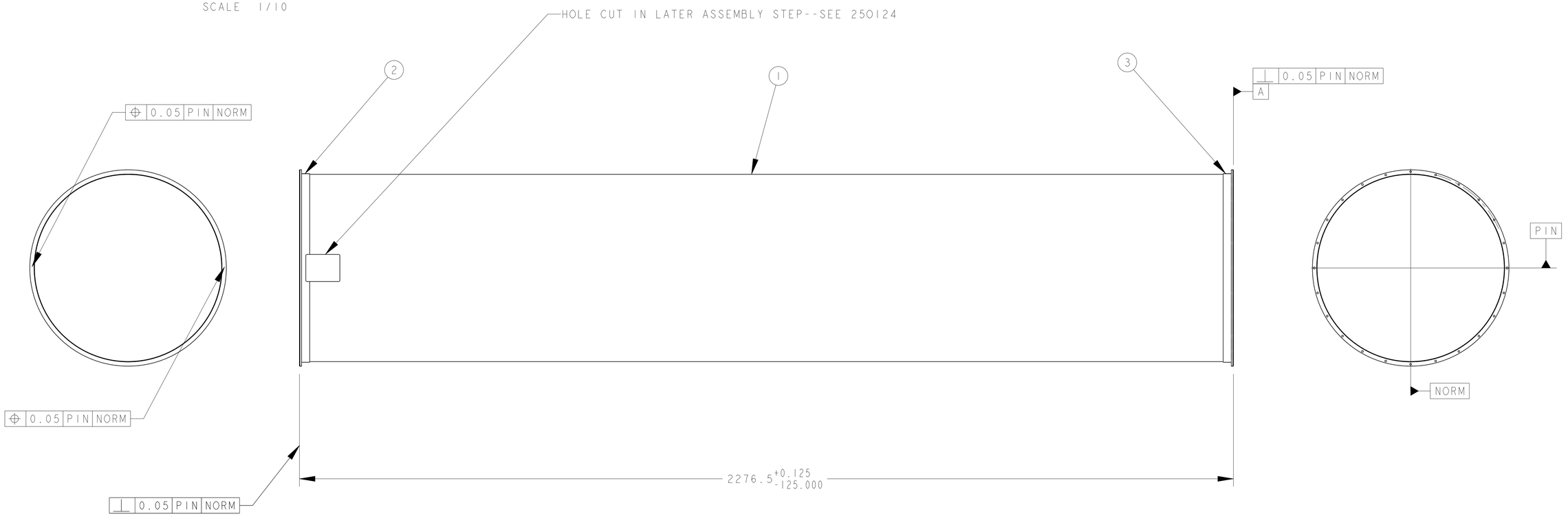

REV	DWG	CHK	ZONE	DATE	CHANGES

UNLESS OTHERWISE SPECIFIED

TOLERANCES		
	X.X ± 0.1	FRAC. ± 1/64
	X.XX ± 0.03	Angles ± 0.25°
	X.XXX ± 0.015	FINISH 125 (μin)

DO NOT SCALE PRINT

THREADS ARE CLASS 2
CHAMFER ENDS OF ALL SCREW TREADS 30°
CUT ROUND, 1.5 THREAD RELIEF ON MACHINED THREADS
BREAK EDGES .016 MAX. ON MACHINED WORK
REMOVE BURRS, WELD SPLATTER & LOOSE SCALE
IN ACCORDANCE WITH ASME Y14.5M & B46.1

SHOP ORDERS

ACCT NO.	NO. REQD	SER NO.	-
DEL TO		DATE ISSD	-
		DATE REQD	-
SURFACE TREATMT		US ATLAS SILICON SUBSYSTEM (Fraga)	
IDENT METHOD	TAG		
PROJECT NUMBER			
PROJECT NAME	US ATLAS SILICON SUBSYSTEM		
DWG BY	HARTMAN	DATE	17-Feb-03
CHK BY	ANDERSSEN	DATE	
APR BY	GILCHRIESE	DATE	

ERNEST ORLANDO LAWRENCE BERKELEY NATIONAL LABORATORY
UNIVERSITY OF CALIFORNIA - BERKELEY

ATLAS PIXEL DETECTOR
PIXEL SUPPORT TUBE
FORWARD SHELL A WITH FLANGES

MICROFILMED:	DWG. TYPE	SHOWN ON	SCALE: 1/5	DO NOT SCALE PRINTS
	ASSEM		SHEET 1 OF 1	
PATENT CLEAR:	DESIGN ACCT. NO.	CATEGORY CODE	DWG. NO. 2501224	SIZE / REV. 1
	PIAPII	AP6300		

Dwg. File: 2501224 Model File: 2501224