DWG. NO.	SIZE	REV.	SH.
2501124		1	1

DESCRIPTION	MATERIAL	MAT. LOCATION
	CN60/EX1515	-

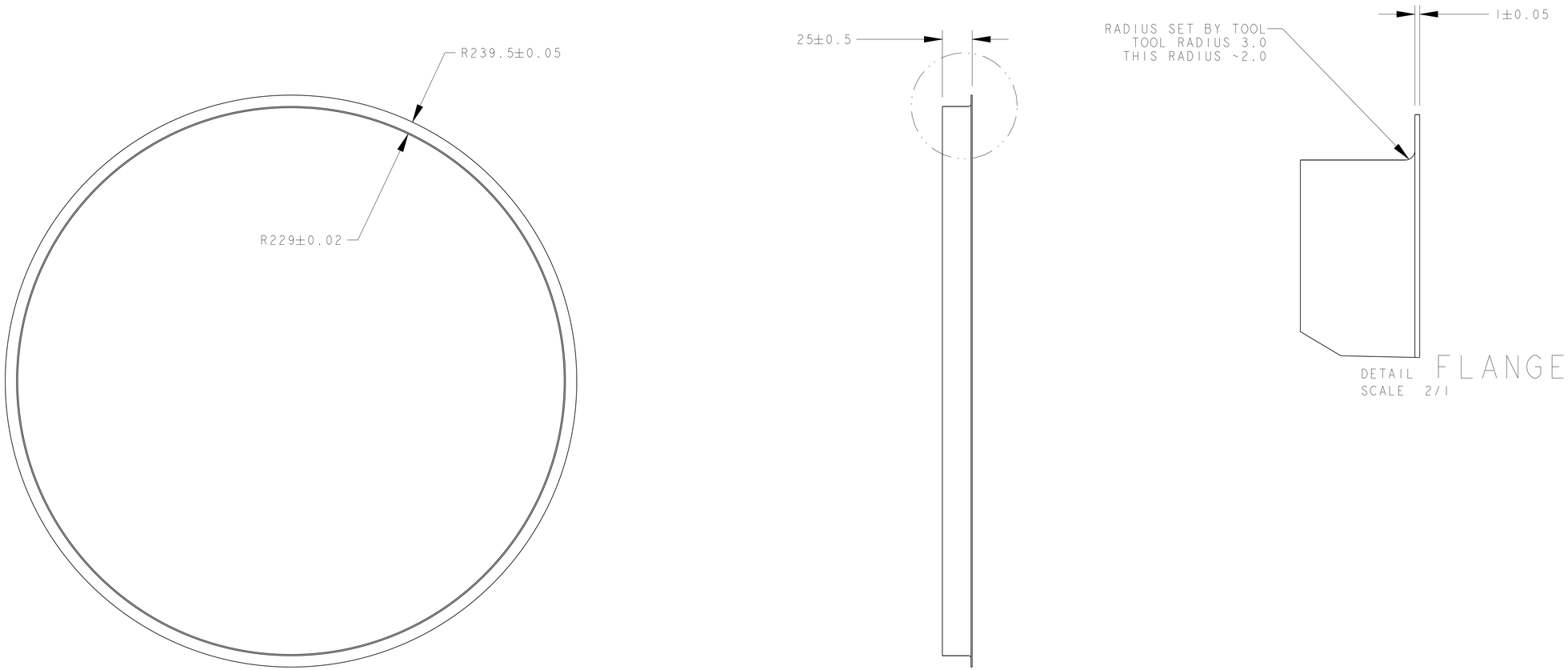

REV	DWG	CHK	ZONE	DATE	CHANGES

UNLESS OTHERWISE SPECIFIED

TOLERANCES		
	X.X ± 0.5	FRAC. ± 1/64
	X.XX ± 0.05	Angles ± 1.00°
	X.XXX ± 0.010	FINISH 125 √(μin)

DO NOT SCALE PRINT

THREADS ARE CLASS 2
CHAMFER ENDS OF ALL SCREW TREADS 30°
CUT ROUND, 1.5 THREAD RELIEF ON MACHINED THREADS
BREAK EDGES .016 MAX. ON MACHINED WORK
REMOVE BURRS, WELD SPLATTER & LOOSE SCALE
IN ACCORDANCE WITH ASME Y14.5M & B46.1

SHOP ORDERS

ACCT NO.	NO. REQD SEE	SER NO.	-
DEL TO		DATE TSSD	-
SURFACE TREATMT		DATE REQD	-
IDENT METHOD	TAG		
PROJECT NUMBER	ATLIP-ED-XXXX	US ATLAS SILICON SUBSYSTEM (Tags)	
PROJECT NAME	US ATLAS SILICON SUBSYSTEM		
DWG BY	N. HARTMAN	DATE	17-Feb-03
CHK BY		DATE	
APR BY	E. ANDERSSEN	DATE	

ERNEST ORLANDO LAWRENCE BERKELEY NATIONAL LABORATORY
UNIVERSITY OF CALIFORNIA - BERKELEY

ATLAS PIXEL DETECTOR
PIXEL SUPPORT TUBE
PST FLANGE BASE LAMINATE--TRIMMED SHAPE

MICROFILMED:	DWG. TYPE	SHOWN ON	SCALE: 1/2	DO NOT SCALE PRINTS
	PART		SHEET 1 OF 1	
PATENT CLEAR:	DESIGN ACCT. NO.	CATEGORY CODE	DWG. NO.	SIZE	REV.
		AP6300	2501124		1

Dwg. File: 2501124 Model File: PST_FLANGE_NEW_CONCEPT