ITEM	PART NO	REQD	DESCRIPTION	MATERIAL
7	250119	4	PST FLEXURE MOUNT BLOCK	-
6	250117	1	BARREL SHELL LAMINATE	
5	250113-B	1	VEE RAIL BARREL	-
4	250113-B	1	FLAT RAIL BARREL	P30 EX1515
3	250104	5	HAT HOOP STIFFENER ARRAY OF THREE	-
2	250099	4	MOUNT PAD	CN60 EX1515
1	250024	2	BARREL FLANGE ASSEMBLY	

DETAIL MOUNT PAD
SCALE 33/100

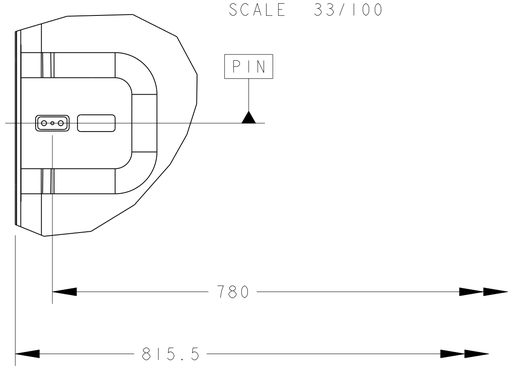

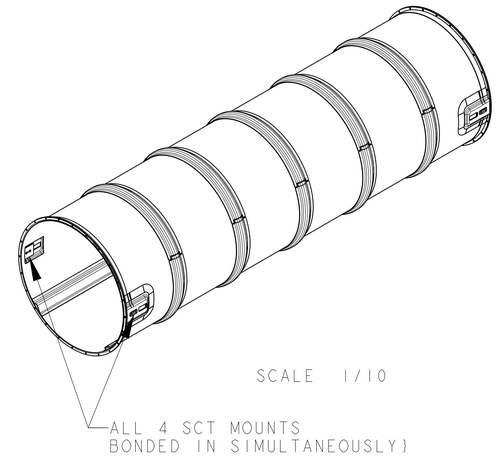

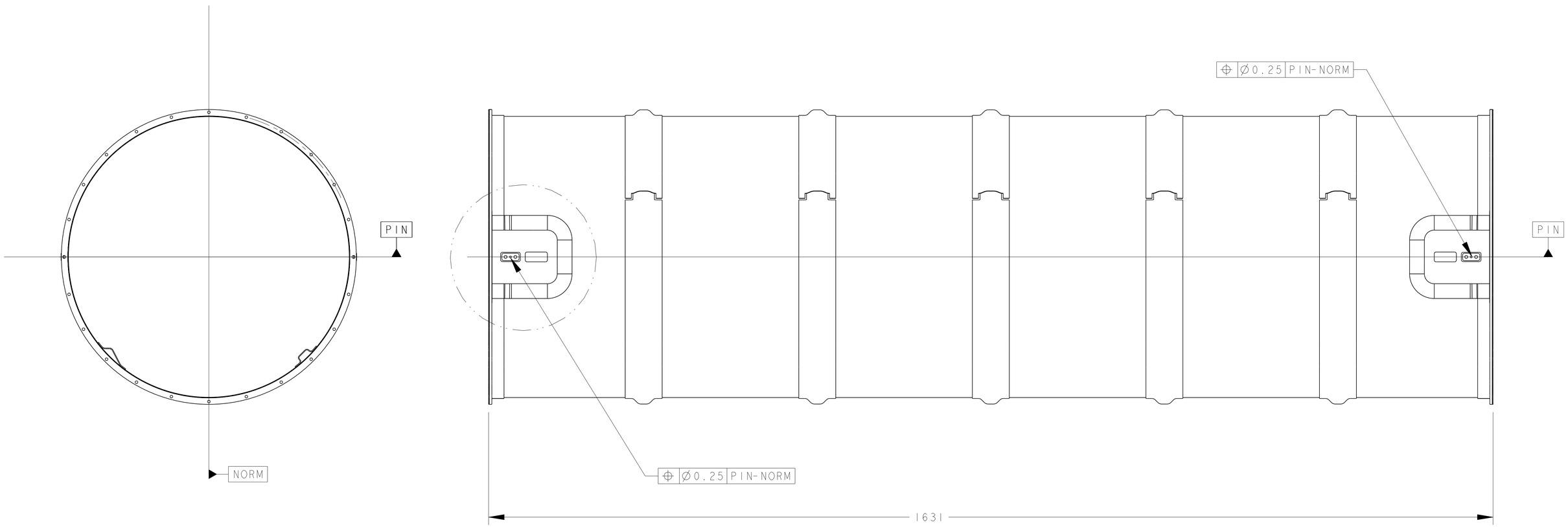

THE MOUNT BLOCKS ARE HELD FIXED RELATIVE TO EACH OTHER VIA THE SCT TRANSFER JIG
THE TRANSFER JIG IS THEN POSITIONED TO WITHIN THE SPECIFIED POSITION TOLERANCES
TO GUARANTEE THE ALIGNMENT OF THE PST WITH THE ENVELOPE, THE LOOSE
REQUIREMENTS HERE ARE A CONSEQUENCE OF TIGHT TOLERANCES ELSEWHERE

REV	DWG	CHK	ZONE	DATE	CHANGES

UNLESS OTHERWISE SPECIFIED

TOLERANCES		
	X.X ± 0.1	FRAC. ± 1/64
	X.XX ± 0.03	Angles ± 0.25°
	X.XXX ± 0.015	FINISH 125 √(μin)

DO NOT SCALE PRINT

THREADS ARE CLASS 2
CHAMFER ENDS OF ALL SCREW TREADS 30°
CUT ROUND, 1.5 THREAD RELIEF ON MACHINED THREADS
BREAK EDGES .016 MAX. ON MACHINED WORK
REMOVE BURRS, WELD SPLATTER & LOOSE SCALE
IN ACCORDANCE WITH ASME Y14.5M & B46.1

SHOP ORDERS

ACCT NO.	NO. REQD	SER NO.	-
		DATE ISSD	-
DEL TO		DATE REQD	-
SURFACE TREATMT			
IDENT METHOD	TAG		
PROJECT NUMBER	ATLIP-ED-XXXX	US ATLAS SILICON SUBSYSTEM (Flagst	
PROJECT NAME	US ATLAS SILICON SUBSYSTEM		
DWG BY	HARTMAN	DATE	15-Feb-03
CHK BY		DATE	
APR BY	GILCHRIESE	DATE	

ERNEST ORLANDO LAWRENCE
BERKELEY NATIONAL LABORATORY
UNIVERSITY OF CALIFORNIA - BERKELEY

ATLAS PIXEL DETECTOR
PIXEL SUPPORT TUBE
BARREL SHELL WITH SCT MOUNTS

MICROFILMED:	DWG. TYPE	SHOWN ON	SCALE: 3/10	DO NOT SCALE PRINTS
	ASSEM		SHEET 1 OF 1	
PATENT CLEAR:	DESIGN ACCT. NO.	CATEGORY CODE	DWG. NO.	SIZE / REV.
	PIAPII	AP6300	2501104	1

Dwg. File: 250110_Model_File: 250110