| DWG. NO. | SIZE | REV. | SH. |
|---|---|---|---|
| 2501074 | | | 1 |

| ITEM | PART NO | REQD | DESCRIPTION | MATERIAL |
|---|---|---|---|---|
| 2 | 250117 | 1 | BARREL SHELL LAMINATE | |
| 1 | 250024 | 2 | BARREL FLANGE ASSEMBLY | |

DATUM A IS ON SIDE C

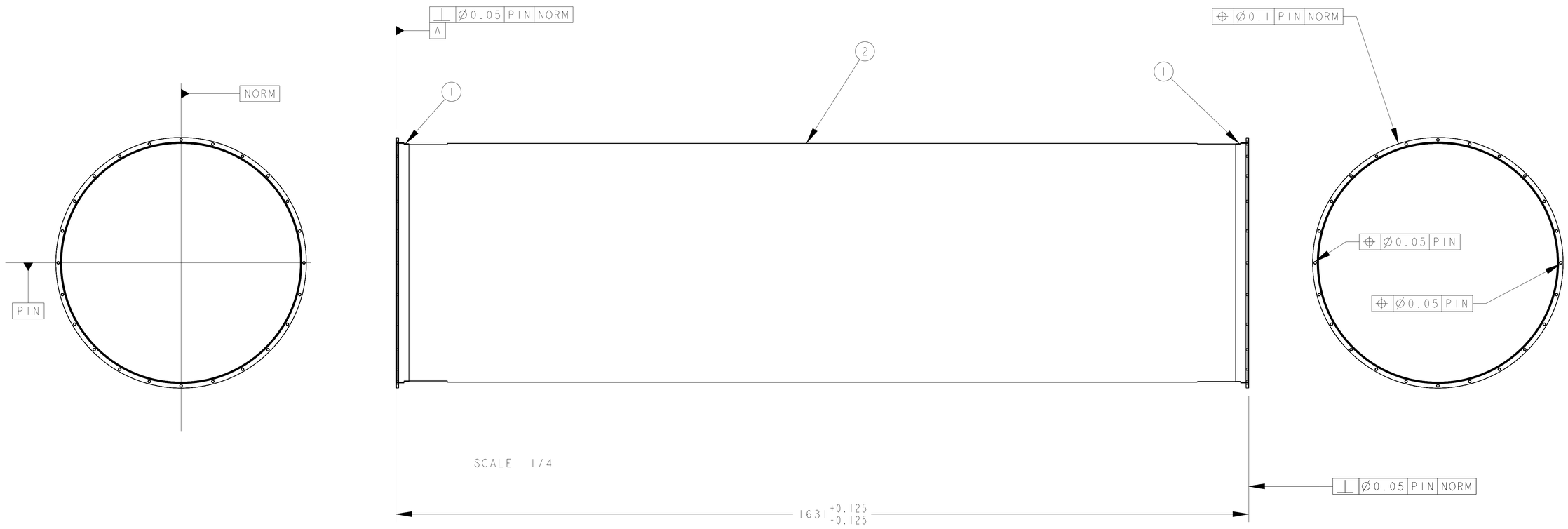


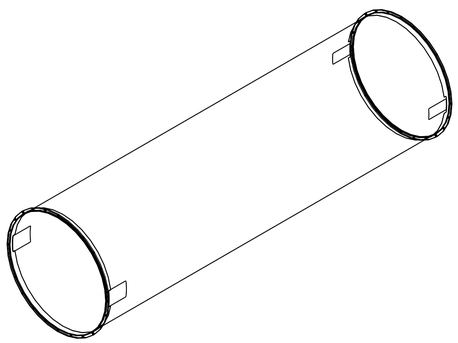

SCALE 1/10

| REV | DWG | CHK | ZONE | DATE | CHANGES |
|---|---|---|---|---|---|

UNLESS OTHERWISE SPECIFIED

| TOLERANCES | | |
|---|---|---|
| | X.X ± 0.1 | FRAC. ± 1/64 |
| | X.XX ± 0.03 | Angles ± 0.25° |
| | X.XXX ± 0.015 | FINISH 125 (μin) |

DO NOT SCALE PRINT

THREADS ARE CLASS 2
CHAMFER ENDS OF ALL SCREW TREADS 30°
CUT ROUND, 1.5 THREAD RELIEF ON MACHINED THREADS
BREAK EDGES .016 MAX. ON MACHINED WORK
REMOVE BURRS, WELD SPLATTER & LOOSE SCALE
IN ACCORDANCE WITH ASME Y14.5M & B46.1

SHOP ORDERS

| | | | |
|---|---|---|---|
| ACCT NO. | NO. REQD | SER NO. | - |
| DEL TO | | DATE ISSD | - |
| SURFACE TREATMT | | DATE REQD | - |
| IDENT METHOD | TAG | | |
| PROJECT NUMBER | ATLIP-ED-XXXX | US ATLAS SILICON SUBSYSTEM (Page) | |
| PROJECT NAME | US ATLAS SILICON SUBSYSTEM | | |
| DWG BY | HARTMAN | DATE | 14-Feb-03 |
| CHK BY | | DATE | |
| APR BY | GILCHRIESE | DATE | |

ERNEST ORLANDO LAWRENCE
BERKELEY NATIONAL LABORATORY
UNIVERSITY OF CALIFORNIA - BERKELEY

ATLAS PIXEL DETECTOR
PIXEL SUPPORT TUBE
BARREL SHELL WITH FLANGES

| MICROFILMED: | DWG. TYPE | SHOWN ON | SCALE: 13/100 | DO NOT SCALE PRINTS |
|---|---|---|---|---|
| | ASSEM | | SHEET 1 OF 1 | |
| PATENT CLEAR: | DESIGN ACCT. NO. | CATEGORY CODE | DWG. NO. 2501074 | SIZE / REV. |
| | PIAPII | AP6300 | | |

Dwg. File: 2501074 Model File: 2501074