DWG. NO.	SIZE	REV.	SH.
2501034		1	1

ITEM	PART NO	REQD	DESCRIPTION	MATERIAL
2	250081		MOUNT PAD	CN60 EX1515
1	210106		BARREL MOUNT PAD TOOL	PRODEC 316SS

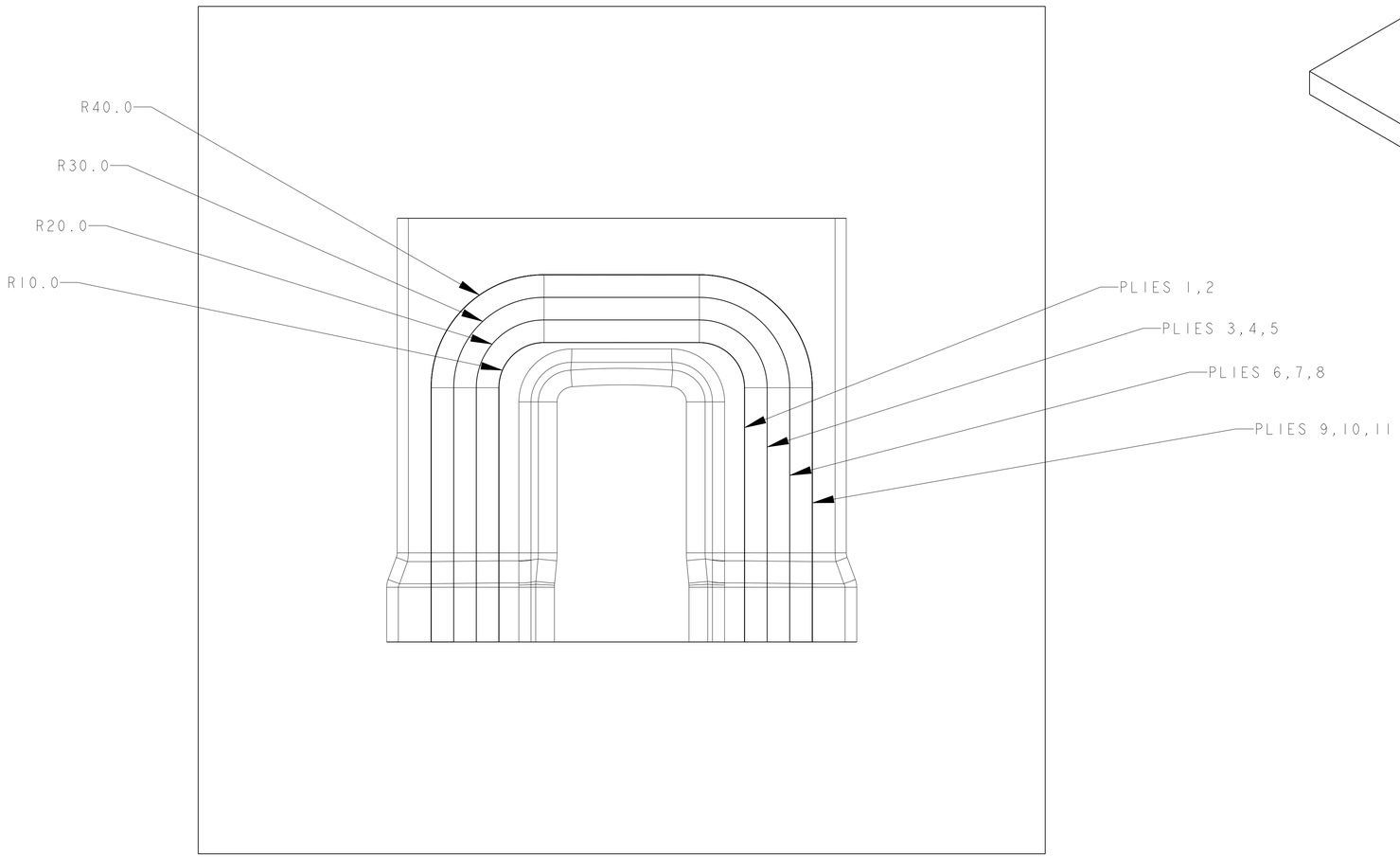

SCALE 1/1

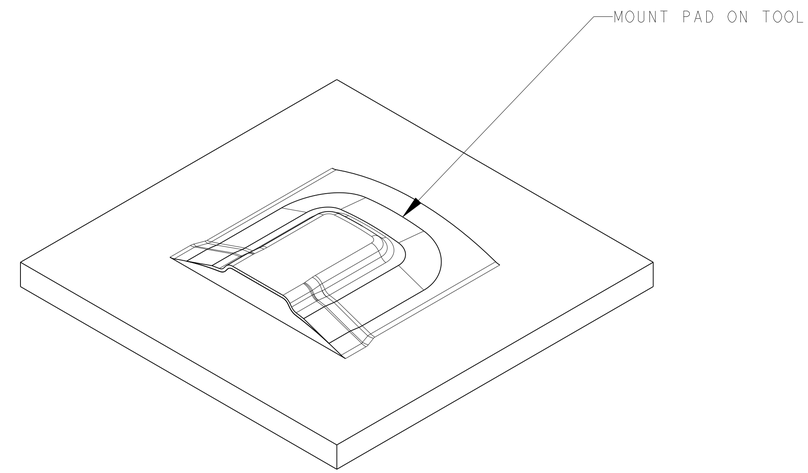

SCALE 1/2

PLY #	ORIENTATION	DIMENSION
1	0/90	90 x 115
2	0/90	90 x 115
3	+/-45	110 x 125
4	+/-45	110 x 125
5	0/90	110 x 125
6	+/-45	130 x 135
7	0/90	130 x 135
8	+/-45	130 x 135
9	+/-45	150 x 145
10	0/90	150 x 145
11	0/90	150 x 145

REV	DWG	CHK	ZONE	DATE	CHANGES

UNLESS OTHERWISE SPECIFIED

TOLERANCES		
	X.X ± 0.5	FRAC. ± 1/64
	X.XX ± 0.05	Angles ± 1.00°
	X.XXX ± 0.010	FINISH 125 (μin)

DO NOT SCALE PRINT

THREADS ARE CLASS 2
CHAMFER ENDS OF ALL SCREW TREADS 30°
CUT ROUND, 1.5 THREAD RELIEF ON MACHINED THREADS
BREAK EDGES .016 MAX. ON MACHINED WORK
REMOVE BURRS, WELD SPLATTER & LOOSE SCALE
IN ACCORDANCE WITH ASME Y14.5M & B46.1

SHOP ORDERS

ACCT NO.	NO. REQD	SER NO.	-
DEL TO		DATE ISSD	-
SURFACE TREATMT	-	DATE REQD	-
IDENT METHOD	TAG		
PROJECT NUMBER	N/A	US ATLAS SILICON SUBSYSTEM (Tags)	
PROJECT NAME	US ATLAS SILICON SUBSYSTEM		
DWG BY	ANDERSSEN	DATE	15-Feb-03
CHK BY	None	DATE	
APR BY	GILCHRIESE	DATE	

ERNEST ORLANDO LAWRENCE BERKELEY NATIONAL LABORATORY
UNIVERSITY OF CALIFORNIA - BERKELEY

ATLAS PIXEL DETECTOR
PIXEL SUPPORT TUBE
MOUNT PAD TOOL WITH PART

MICROFILMED:	DWG. TYPE	SHOWN ON	SCALE: 1/2	DO NOT SCALE PRINTS
	ASSEM	210XXX	SHEET 1 OF 1	
PATENT CLEAR:	DESIGN ACCT. NO.	CATEGORY CODE	DWG. NO.	SIZE / REV.
	PIAP11	AP6300	2501034	1

Dwg File: 250103 Model File: MOUNT_PAD_TOOL