DWG. NO.	SIZE	REV.	SH.
2500994	1	1	1

DESCRIPTION	MATERIAL	MAT. LOCATION
-	CN60 EX1515	-

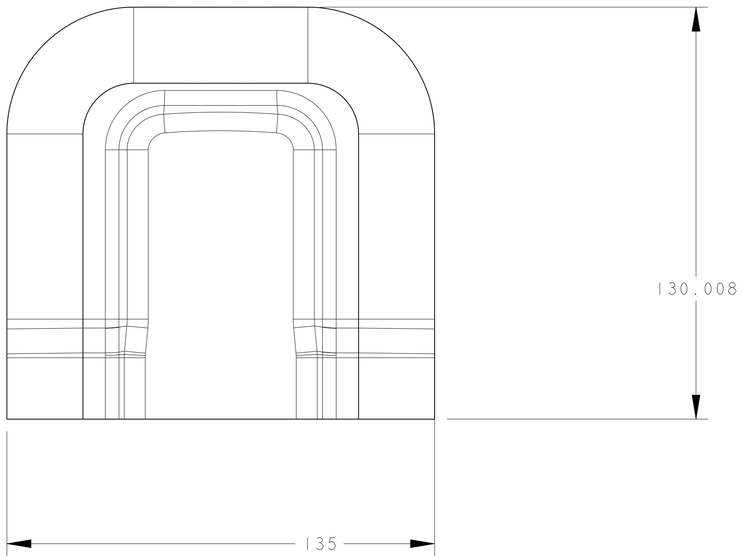

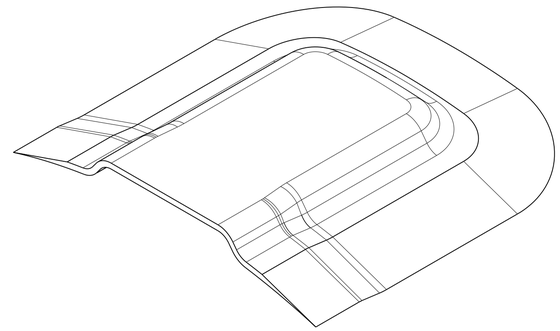

SCALE 1/1

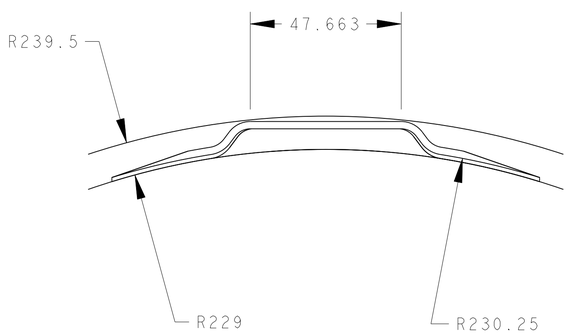

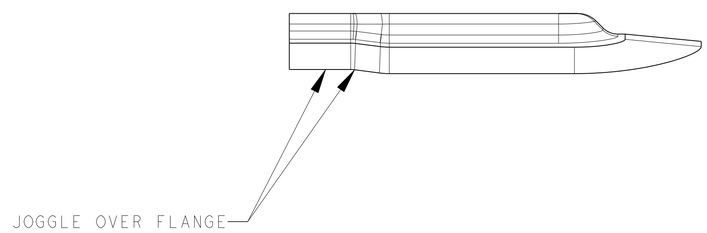

REV	DWG	CHK	ZONE	DATE	CHANGES

UNLESS OTHERWISE SPECIFIED

TOLERANCES

X.X ± 0.5	FRAC. ± 1/64
X.XX ± 0.05	Angles ± 1.00°
X.XXX ± 0.010	FINISH 125 √(μin)

DO NOT SCALE PRINT

THREADS ARE CLASS 2
CHAMFER ENDS OF ALL SCREW TREADS 30°
CUT ROUND, 1.5 THREAD RELIEF ON MACHINED THREADS
BREAK EDGES .016 MAX. ON MACHINED WORK
REMOVE BURRS, WELD SPLATTER & LOOSE SCALE
IN ACCORDANCE WITH ASME Y14.5M & B46.1

SHOP ORDERS

ACCT NO.		NO. REQD	
DEL TO			
SURFACE TREATMT	-		
IDENT METHOD	TAG		
PROJECT NUMBER	N/A		
PROJECT NAME	US ATLAS SILICON SUBSYSTEM		
DWG BY	ANDERSSEN	DATE	15-Feb-03
CHK BY	HARTMAN	DATE	
APR BY	GILCHRIESE	DATE	

SER NO. -
DATE ISSD -
DATE REQD -

US ATLAS SILICON SUBSYSTEM Flight

ERNEST ORLANDO LAWRENCE BERKELEY NATIONAL LABORATORY
UNIVERSITY OF CALIFORNIA - BERKELEY

ATLAS PIXEL DETECTOR
PIXEL SUPPORT TUBE
MOUNT PAD

MICROFILMED:	DWG. TYPE	SHOWN ON	SCALE: 1/1	DO NOT SCALE PRINTS
	PART		SHEET 1 OF 1	
PATENT CLEAR:	DESIGN ACCT. NO.	CATEGORY CODE	DWG. NO.	SIZE / REV.
	P1APII	AP6300	2500994	1

Dwg File: 2500994 Model File: MOUNT_PAD_LAWRENCE