ITEM	PART NO	REQD	DESCRIPTION	MATERIAL
2	250004		FLANGE BACKING RING	CN60/EX1515
1	250112		PST FLANGE BASE LAMINATE--TRIMMED SHAPE	CN60/EX1515

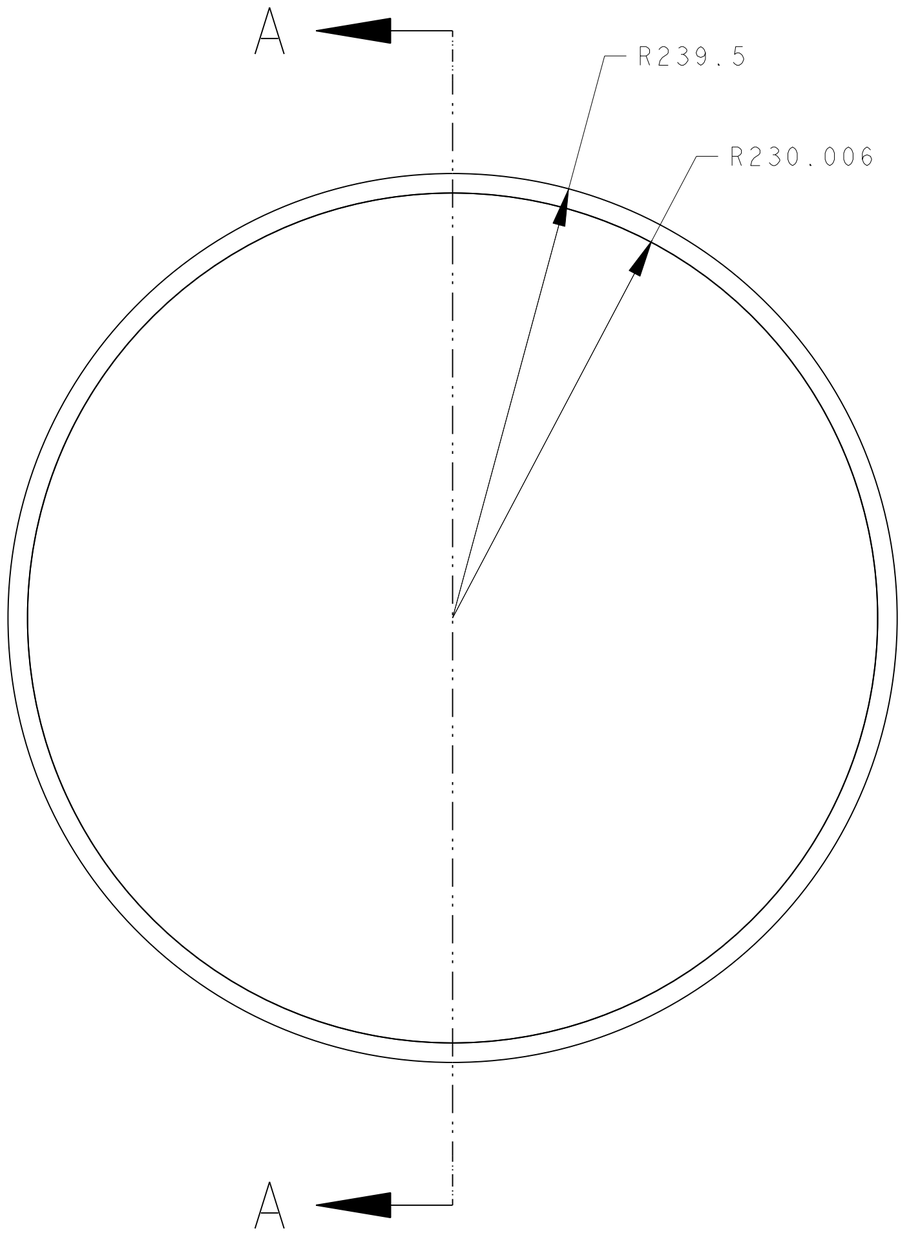

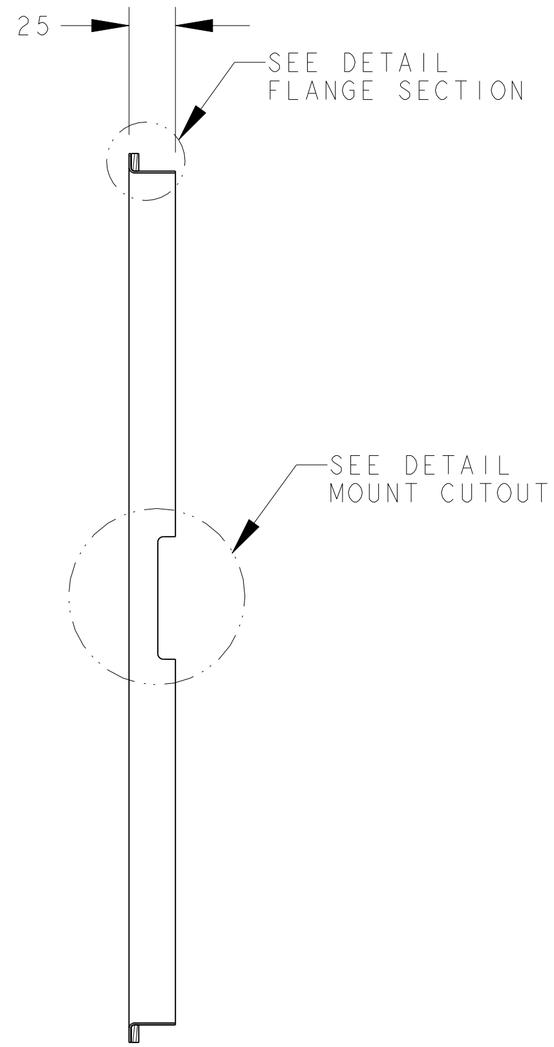

SECTION A - A

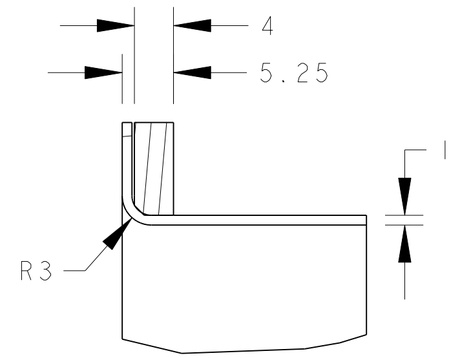

DETAIL FLANGE SECTION
SCALE 2/1

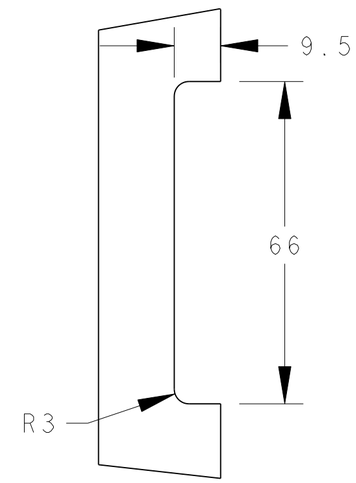

DETAIL MOUNT CUTOUT
SCALE 1/1

REV	DWG	CHK	ZONE	DATE	CHANGES

UNLESS OTHERWISE SPECIFIED

TOLERANCES: X.X ± 0.5 | FRAC. ± 1/64 | X.XX ± 0.05 | Angles ± 1.00° | X.XXX ± 0.010 | FINISH 125 √(µin)

DO NOT SCALE PRINT

THREADS ARE CLASS 2
CHAMFER ENDS OF ALL SCREW TREADS 30°
CUT ROUND, 1.5 THREAD RELIEF ON MACHINED THREADS
BREAK EDGES .016 MAX. ON MACHINED WORK
REMOVE BURRS, WELD SPLATTER & LOOSE SCALE
IN ACCORDANCE WITH ASME Y14.5M & B46.1

SHOP ORDERS

SER NO.	-		
ACCT NO.		NO. REQD	DATE ISSD -
DEL TO			DATE REQD -
SURFACE TREATMT			
IDENT METHOD	TAG		
PROJECT NUMBER			(logo)
PROJECT NAME			
DWG BY	N HARTMAN		DATE 07-Nov-02
CHK BY			DATE
APR BY	N HARTMAN		DATE

ERNEST ORLANDO LAWRENCE BERKELEY NATIONAL LABORATORY
UNIVERSITY OF CALIFORNIA - BERKELEY

ATLAS PIXEL DETECTOR
PIXEL SUPPORT TUBE
PPI FLANGE ASSEMBLY

MICROFILMED:	DWG. TYPE	SHOWN ON	SCALE: 19/50	DO NOT SCALE PRINTS
	ASSEM		SHEET 1 OF 1	
PATENT CLEAR:	DESIGN ACCT. NO.	CATEGORY CODE	DWG. NO.	SIZE	REV.
		AP6300	2500053		1

Dwg. File: PST_FORWARD_FLANGE_PPI.DRW Model File: PST_FORWARD_FLANGE_PPI.ASM

DWG. NO. 2500053 SIZE REV. SH. 1 1

Rev. 1/8/98 EDAS