DWG. NO.	SIZE	REV.	SH.
2100814	1	1	

ITEM	PART NO	REQD	DESCRIPTION	MATERIAL
2	210082		MOUNT PAD	CN60 EX1515
1	210080		MOUNT PAD VACUUM CHUCK	SLA EPOXY

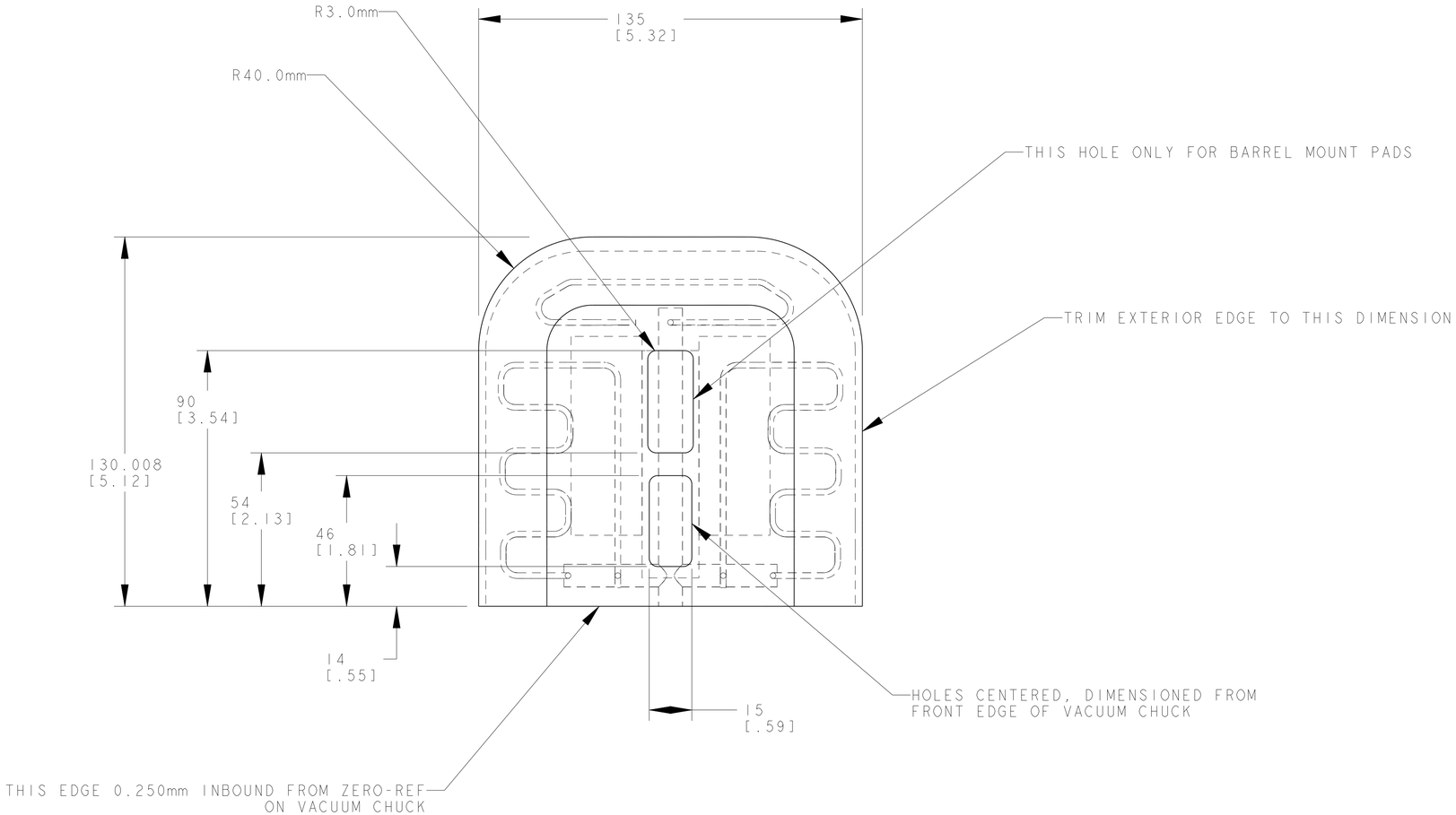

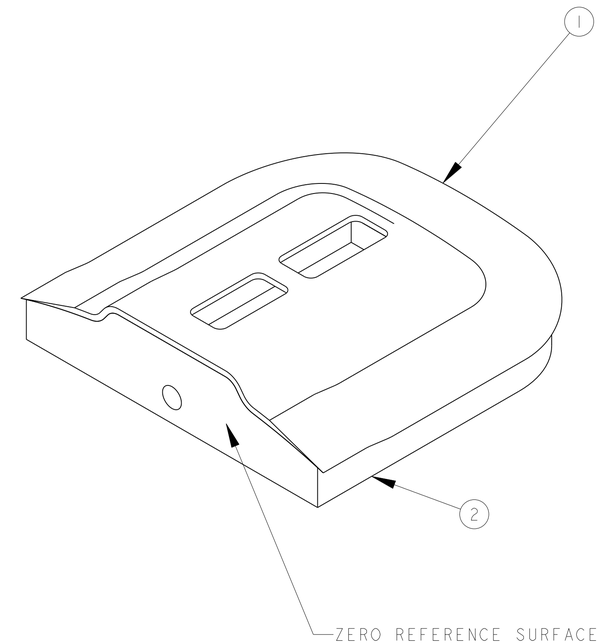

1.) PRODUCTION QUANTITIES OF BARREL MOUNTPADS--6 TOTAL
2.) PRODUCTION QUANTITY OF FORWARD MOUNT PADS--6
3.) PROTOTYPE QUANTITY ~ 6 WITH BOTH HOLES

REV	DWG	CHK	ZONE	DATE	CHANGES

UNLESS OTHERWISE SPECIFIED

TOLERANCES		
	X.X ± 0.5	FRAC. ± 1/64
	X.XX ± 0.05	Angles ± 1.00°
	X.XXX ± 0.010	FINISH 125 √(μin)

DO NOT SCALE PRINT

THREADS ARE CLASS 2
CHAMFER ENDS OF ALL SCREW TREADS 30°
CUT ROUND, 1.5 THREAD RELIEF ON MACHINED THREADS
BREAK EDGES .016 MAX. ON MACHINED WORK
REMOVE BURRS, WELD SPLATTER & LOOSE SCALE
IN ACCORDANCE WITH ASME Y14.5M & B46.1

SHOP ORDERS

ACCT NO.	SEE J.O.	NO. REQD	SEE
DEL TO	SEE JO		
SURFACE TREATMT	-		
IDENT METHOD	TAG		
PROJECT NUMBER	N/A		
PROJECT NAME	US ATLAS SILICON SUBSYSTEM		
DWG BY	ANDERSSEN	DATE	06-Feb-03
CHK BY	HARTMAN	DATE	02/05/03
APR BY	ANDERSSEN	DATE	02/05/03

SER NO.	-
DATE REQD	-
DATE REQD	-

US ATLAS SILICON SUBSYSTEM (Tag#)

ERNEST ORLANDO LAWRENCE BERKELEY NATIONAL LABORATORY
UNIVERSITY OF CALIFORNIA - BERKELEY

ATLAS PIXEL DETECTOR
PIXEL SUPPORT TUBE
MOUNT PAD MACHINE PROFILE

MICROFILMED:	DWG. TYPE		SCALE: 1/1	DO NOT SCALE PRINTS
	ASSEM	SHOWN ON	SHEET 1 OF 1	
PATENT CLEAR:	DESIGN ACCT. NO.	CATEGORY CODE	DWG. NO.	SIZE / REV.
	PIAP-II	AP6300	2100814	1

DWG: 2114 - 210081 MODEL FILE: MOUNT_PAD_MACHINING