DESCRIPTION	MATERIAL	MAT. LOCATION
CNC Machine	Alum 6061-T6	-

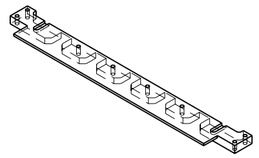

SCALE 1/2

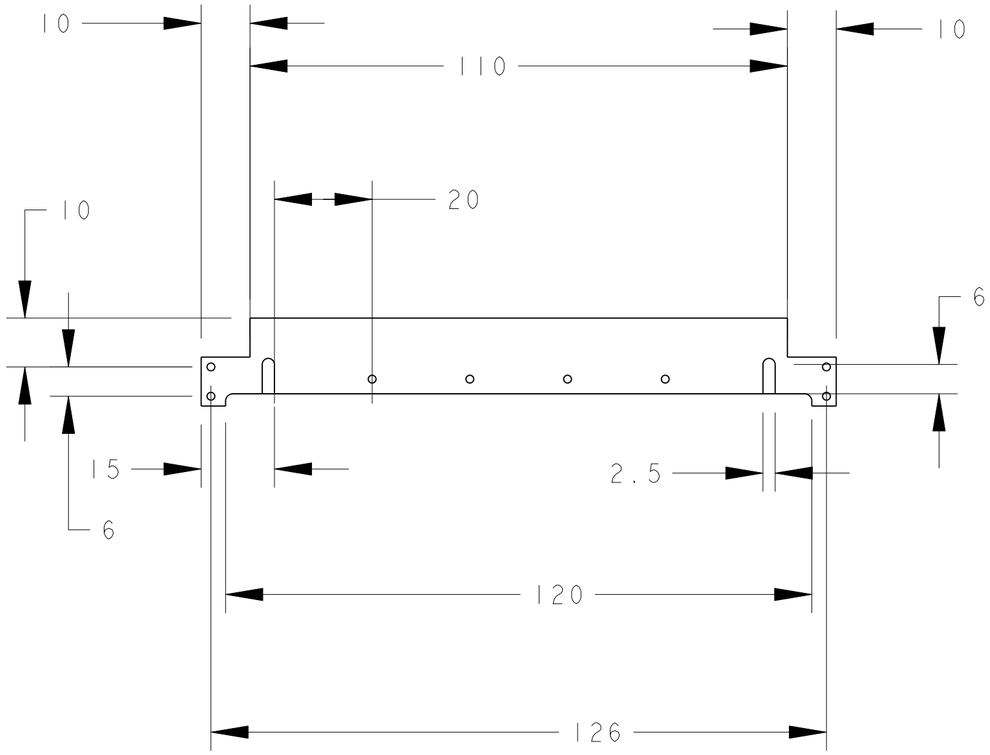

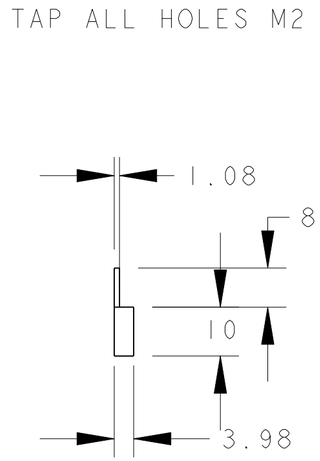

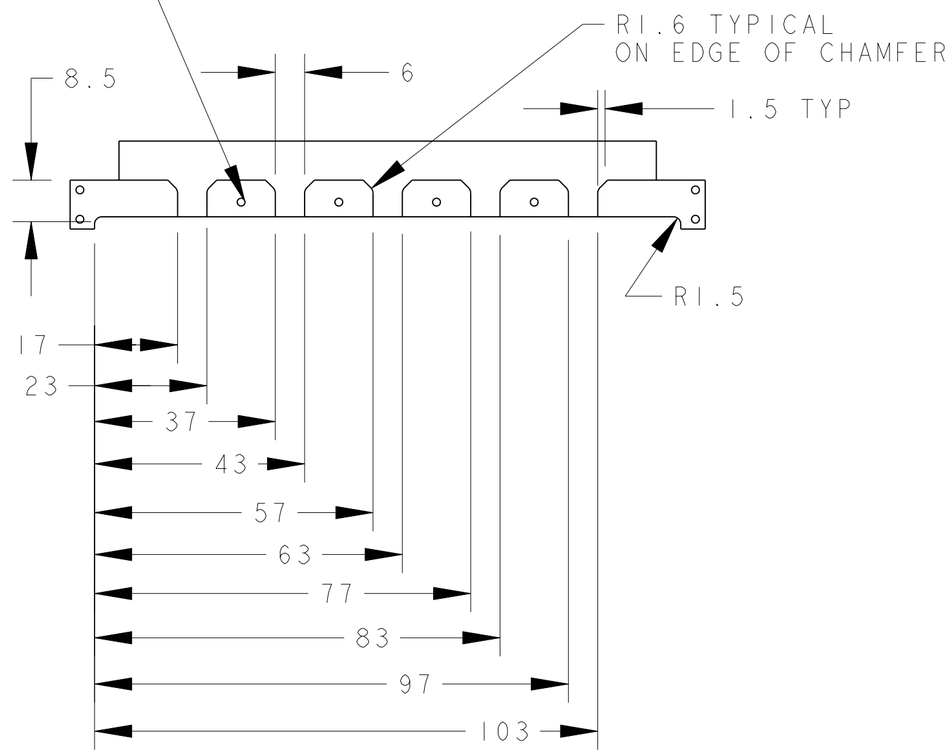

REV	DWG	CHK	ZONE	DATE	CHANGES

UNLESS OTHERWISE SPECIFIED

TOLERANCES			
	X.X ± 0.5	FRAC. ± 1/64	
	X.XX ± 0.05	Angles ± 1.00°	
	X.XXX ± 0.010	FINISH 125 √(μin)	

DO NOT SCALE PRINT

THREADS ARE CLASS 2

CHAMFER ENDS OF ALL SCREW TREADS 30°

CUT ROUND, 1.5 THREAD RELIEF ON MACHINED THREADS

BREAK EDGES .016 MAX. ON MACHINED WORK

REMOVE BURRS, WELD SPLATTER & LOOSE SCALE

IN ACCORDANCE WITH ASME Y14.5M & B46.1

SHOP ORDERS

SER NO.	-		
ACCT NO.		NO. REQD	DATE ISSD -
DEL TO	DARDIN		DATE REQD -
SURFACE TREATMT	Clear Anodize		
IDENT METHOD	TAG		
PROJECT NUMBER	N/A		N/A (logo)
PROJECT NAME	N/A		
DWG BY	D Uken		DATE 09-Mar-06
CHK BY	E Anderssen		DATE
APR BY	E Anderssen		DATE

ERNEST ORLANDO LAWRENCE BERKELEY NATIONAL LABORATORY

UNIVERSITY OF CALIFORNIA - BERKELEY

ATLAS PIXEL DETECTOR

TYPE I SERVICE SUPPORTS

OPTO HEAT SPREADER TOP

MICROFILMED:	DWG. TYPE	SHOWN ON	SCALE: 1/1	DO NOT SCALE PRINTS
	PART		SHEET 1 OF 1	
PATENT CLEAR:	DESIGN ACCT. NO.	CATEGORY CODE	DWG. NO.	SIZE / REV.
	PIAP-II	AP6340	27D7053	B

Dwg. File: 27D7053 Model File: OPTO_HEAT_TRANSFER_PLATE_2

Rev. 1/16/2001 ELMS

DWG. NO. 27D7053 SIZE B REV. SH. 1