DESCRIPTION	MATERIAL	MAT. LOCATION
Lathe	Al 6061-T6	-

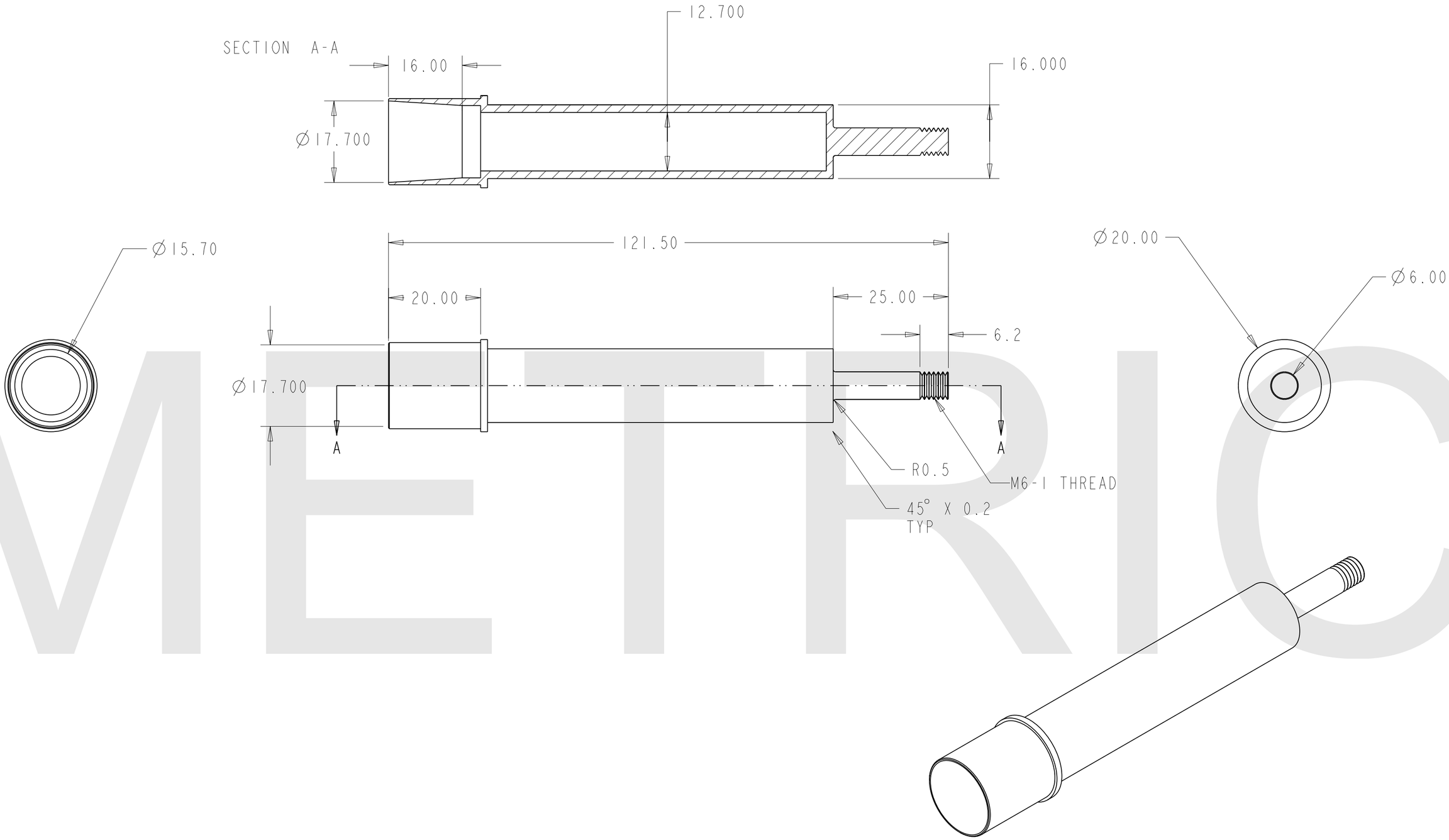

METRIC

REV	DWG	CHK	ZONE	DATE	CHANGES

UNLESS OTHERWISE SPECIFIED

TOLERANCES		
	X.X ± 0.5	FRAC. ± 1/64
	X.XX ± 0.05	Angles ± 1.00°
	X.XXX ± 0.010	FINISH 125 √(µin)

DO NOT SCALE PRINT

THREADS ARE CLASS 2

CHAMFER ENDS OF ALL SCREW TREADS 30°

CUT ROUND, 1.5 THREAD RELIEF ON MACHINED THREADS

BREAK EDGES .016 MAX. ON MACHINED WORK

REMOVE BURRS, WELD SPLATTER & LOOSE SCALE

IN ACCORDANCE WITH ASME Y14.5M & B46.1

SHOP ORDERS

ACCT NO.	NO. REQD 8	DATE ISSD	-
DEL TO	E Anderssen	DATE REQD	-
SURFACE TREATMT			
IDENT METHOD	TAG		
PROJECT NUMBER			(logo)
PROJECT NAME			
DWG BY	D Uken	DATE	26-Jan-05
CHK BY	N Hartman	DATE	
APR BY	E Anderssen	DATE	

SER NO. -

ERNEST ORLANDO LAWRENCE BERKELEY NATIONAL LABORATORY
UNIVERSITY OF CALIFORNIA - BERKELEY

ATLAS PIXEL DETECTOR
BEAM PIPE AND SERVICES SUPPORT
Strut Longeron Tube Trantorq Adapter

MICROFILMED:	DWG. TYPE	SHOWN ON	SCALE: 1.500	DO NOT SCALE PRINTS
	PART	250155	SHEET 1 OF 1	
PATENT CLEAR:	DESIGN ACCT. NO.	CATEGORY CODE	DWG. NO.	SIZE / REV.
	See WebJO	API000	2501813	1

Dwg. file: 250181 Model File: 250181

DWG. NO. 2501813 SIZE REV. 1 SH. 1