DWG. NO.	SIZE	REV.	SH.
21F7994			1

ITEM	PART NO	REQD	DESCRIPTION	MATERIAL
3	21F790		LONGERON TOOL CAP END	STAINLESS
2	21F790		LONGERON TOOL CAP END	STAINLESS
1	21F791		LONGERON TOOL BASE	STAINLESS

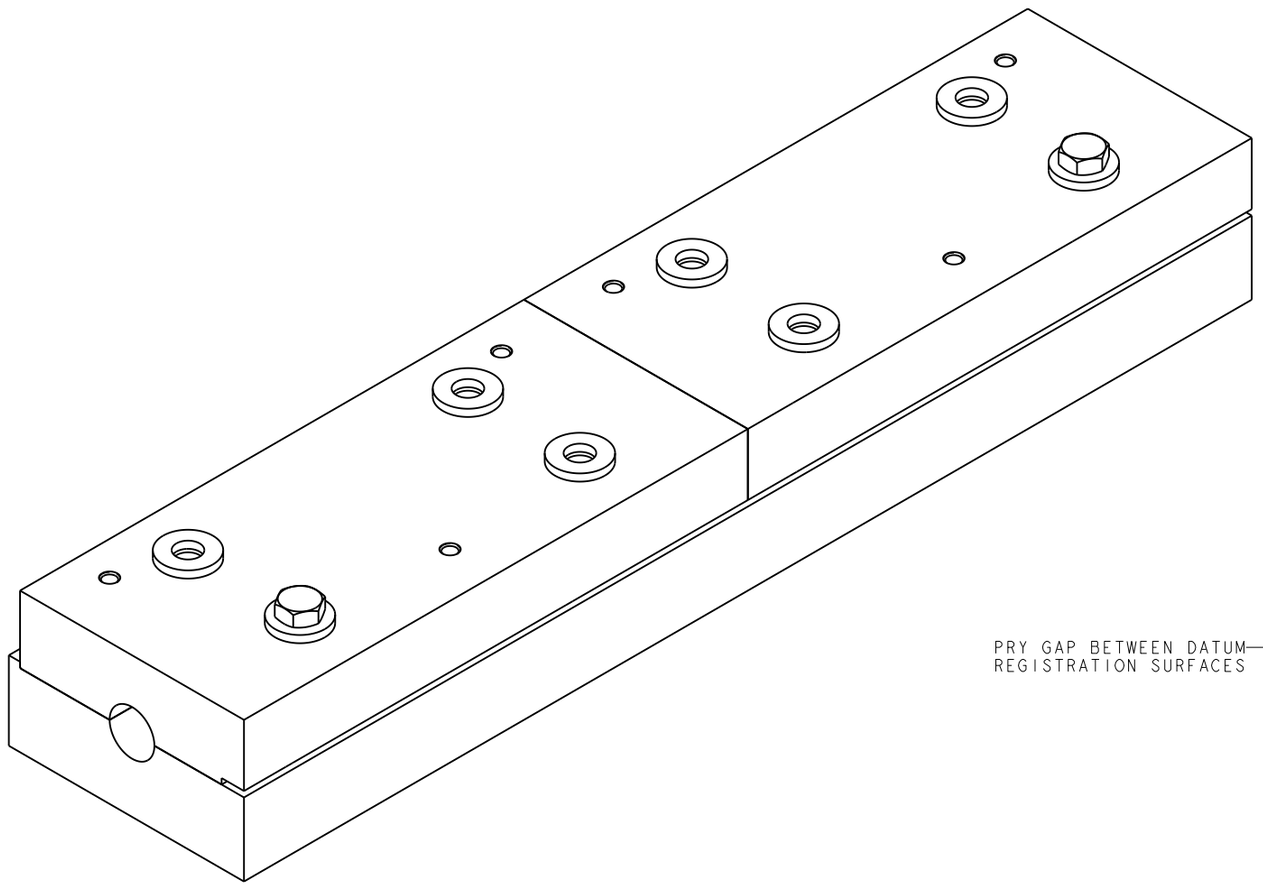

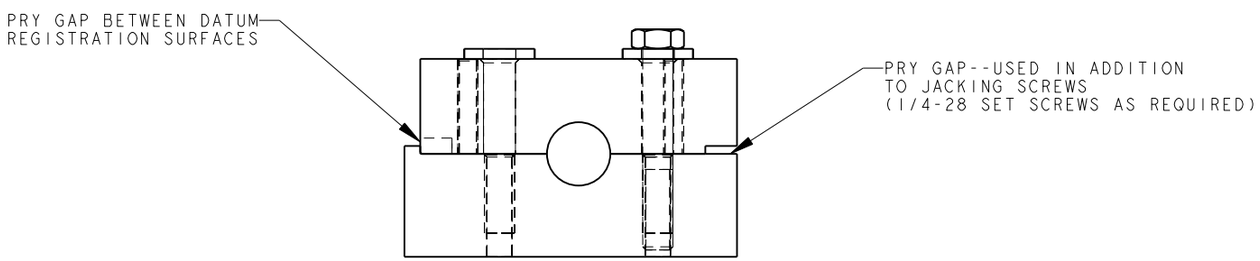

REV	DWG	CHK	ZONE	DATE	CHANGES

UNLESS OTHERWISE SPECIFIED

TOLERANCES	
X.X ± 0.5	FRAC. ± 1/64
X.XX ± 0.05	Angles ± 1.00°
X.XXX ± 0.010	FINISH 125 √(μ in)

DO NOT SCALE PRINT

THREADS ARE CLASS 2
CHAMFER ENDS OF ALL SCREW TREADS 30°
CUT ROUND, 1.5 THREAD RELIEF ON MACHINED THREADS
BREAK EDGES .016 MAX. ON MACHINED WORK
REMOVE BURRS, WELD SPLATTER & LOOSE SCALE
IN ACCORDANCE WITH ASME Y14.5M & B46.1

SHOP ORDERS

ACCT NO.	NO. REQD	SER NO.	-
		DATE ISSD	-
DEL TO		DATE REQD	-
SURFACE TREATMT	-		
IDENT METHOD	TAG		
PROJECT NUMBER			
PROJECT NAME			
DWG BY	ANDERSSEN	DATE	20-Jan-04
CHK BY	HARTMAN	DATE	
APR BY	ANDERSSEN	DATE	

ERNEST ORLANDO LAWRENCE BERKELEY NATIONAL LABORATORY
UNIVERSITY OF CALIFORNIA - BERKELEY

ATLAS PIXEL DETECTOR
BEAM PIPE AND SERVICE SUPPORT
LONGERON TOOL ASSEMBLY

MICROFILMED:	DWG. TYPE	SHOWN ON	SCALE: 1/1	DO NOT SCALE PRINTS
	ASSEM		SHEET 1 OF 1	
PATENT CLEAR:	DESIGN ACCT. NO.	CATEGORY CODE	DWG. NO.	SIZE / REV.
	PIABII	AP8300	21F7994	

Dwg. File: 21F7994 Model File: LONGERON_TOOL_ASSEMBLY