DWG. NO.	SIZE	REV.	SH.
2500412		1	1

ITEM	PART NO	REQD	DESCRIPTION	MATERIAL
4	250044		Spring Plunger	Aluminum 6061-T6
3	250045		Thrust Washer	Aluminum 6061-T6
2	ASR_C0600_081_3000_SS		Stainless Steel Compressoin Spring	Stainless Steel
1	250183		Tension Mechanism Mount Bushing	Aluminum 6061-T6

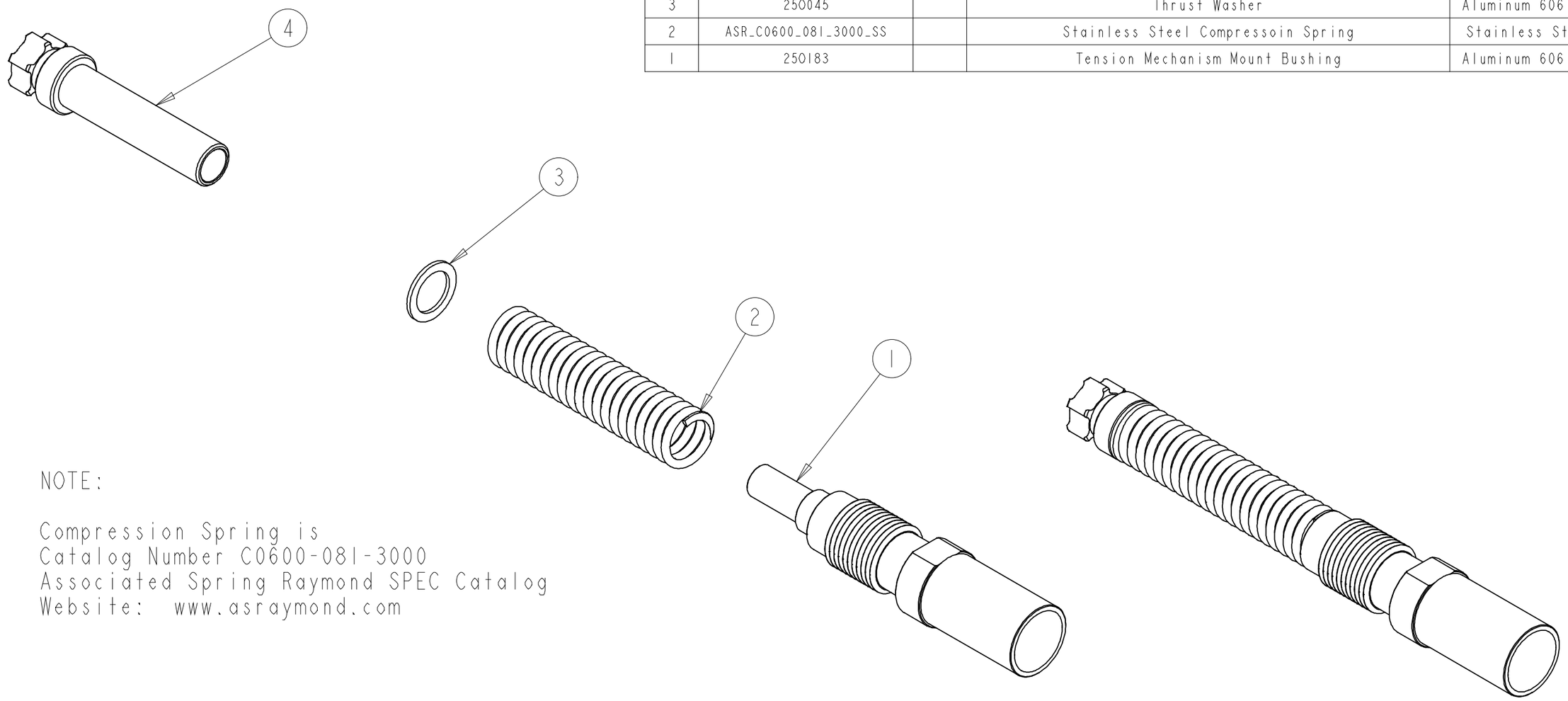

NOTE:

Compression Spring is
Catalog Number C0600-081-3000
Associated Spring Raymond SPEC Catalog
Website: www.asraymond.com

REV	DWG	CHK	ZONE	DATE	CHANGES

UNLESS OTHERWISE SPECIFIED

TOLERANCES		
	X.X ± 0.25	FRAC. ± 1/64
	X.XX ± 0.10	Angles ± 0.50°
	X.XXX ± 0.05	FINISH 125 √(µin)

DO NOT SCALE PRINT

THREADS ARE CLASS 2
CHAMFER ENDS OF ALL SCREW TREADS 30°
CUT ROUND, 1.5 THREAD RELIEF ON MACHINED THREADS
BREAK EDGES .016 MAX. ON MACHINED WORK
REMOVE BURRS, WELD SPLATTER & LOOSE SCALE
IN ACCORDANCE WITH ASME Y14.5M & B46.1

SHOP ORDERS

ACCT NO.	NO. REQD 1	SER NO.	-
DEL TO	N Hartman	DATE ISSD	-
SURFACE TREATMT		DATE REQD	-
IDENT METHOD	TAG		
PROJECT NUMBER		(logo)	
PROJECT NAME			
DWG BY	D Uken	DATE	21-Mar-03
CHK BY	N Hartman	DATE	
APR BY	E Anderssen	DATE	

ERNEST ORLANDO LAWRENCE BERKELEY NATIONAL LABORATORY
UNIVERSITY OF CALIFORNIA - BERKELEY

ATLAS PIXEL DETECTOR
TENSION MECHANISM
Spring Plunger and Mount Bushing

MICROFILMED:	DWG. TYPE	SHOWN ON	SCALE: 1.000	DO NOT SCALE PRINTS
	ASSEM	250043	SHEET 1 OF 1	
PATENT CLEAR:	DESIGN ACCT. NO.	CATEGORY CODE	DWG. NO.	SIZE / REV.
		API300	2500412	1

Rev. 1/8/2001 ATLAS

Dwg. File: 250041 Model File: 250041