DWG. NO.	SIZE	REV.	SH.
2501434		1	1

ITEM	PART NO	REQD	DESCRIPTION	MATERIAL
5	27A003	4	Beampipe Cruciform Support Panel, Middle Segment	UCS-102-3/8-3.0 x 23mm thick
4	27A002	4	Beampipe Cruciform Support Panel, Barrel Wedge	UCS-102-3/8-3.0 x 23mm thick
3	27A001	2	Beampipe Cruciform Support Panel, Forward Wedge	UCS-102-3/8-3.0 x 23mm thick
2	27A000	4	Beampipe Cruciform Support Panel, Fwd-Brl Segment	UCS-102-3/8-3.0 x 23mm thick
1	27Q004	1	Cruciform Core Material, 2' by 3' Blank Sheet	UCS-102-3/8-3.0 X 23mm thick

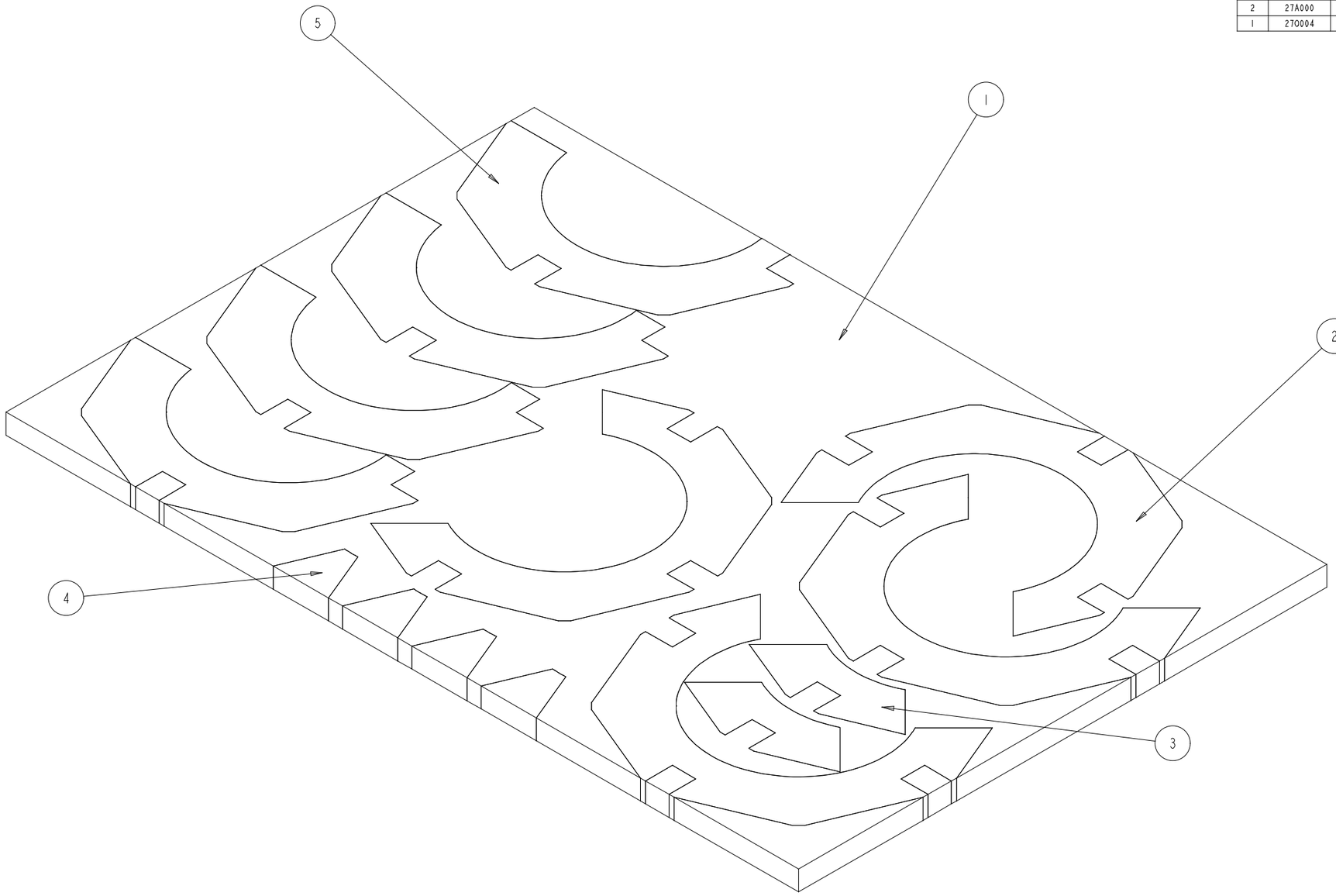

REV	DWG	CHK	ZONE	DATE	CHANGES

UNLESS OTHERWISE SPECIFIED

TOLERANCES		
	X.X ± 0.1	FRAC. ± 1/64
	X.XX ± 0.01	Angles ± 0.50°
	X.XXX ± 0.001	FINISH 125 √ (µ in)

DO NOT SCALE PRINT

THREADS ARE CLASS 2
CHAMFER ENDS OF ALL SCREW TREADS 30°
CUT ROUND, 1.5 THREAD RELIEF ON MACHINED THREADS
BREAK EDGES .016 MAX. ON MACHINED WORK
REMOVE BURRS, WELD SPLATTER & LOOSE SCALE
IN ACCORDANCE WITH ASME Y14.5M & B46.1

SHOP ORDERS

ACCT NO.	NO. REQD 1	SER NO.	-
DEL TO	E Anderssen	DATE ISSD	-
SURFACE TREATMT		DATE REQD	-
IDENT METHOD	TAG		
PROJECT NUMBER		(Cage)	
PROJECT NAME			
DWG BY	D Uken	DATE	08-Oct-03
CHK BY	N Hartman	DATE	
APR BY	E Anderssen	DATE	

ERNEST ORLANDO LAWRENCE BERKELEY NATIONAL LABORATORY
UNIVERSITY OF CALIFORNIA - BERKELEY

ATLAS PIXEL DETECTOR
BEAM PIPE AND SERVICES SUPPORT
Cruciform Core Material Cut Pattern

MICROFILMED:	DWG. TYPE	SHOWN ON	SCALE: 0.500	DO NOT SCALE PRINTS
	ASSEM		SHEET 1 OF 2	
PATENT CLEAR:	DESIGN ACCT. NO.	CATEGORY CODE	DWG. NO.	SIZE / REV.
	See WebJO	API000	2501434	1

Dwg. File: 2501434 Model File: 2501434