DWG. NO.	SIZE	REV.	SH.
2500404		1	1

ITEM	PART NO	REQD	DESCRIPTION	MATERIAL
6	250050		Collet Cap	304 Stainless Steel
5	250049		Collet Cable Grip	Aluminum 6061-T6
4	250049		Collet Cable Grip	Aluminum 6061-T6
3	250084		Adjuster Assembly	
2	250043		Flex Circuit Installation on Spring Plunger Retainer	
1	250041		Spring Plunger and Mount Bushing	

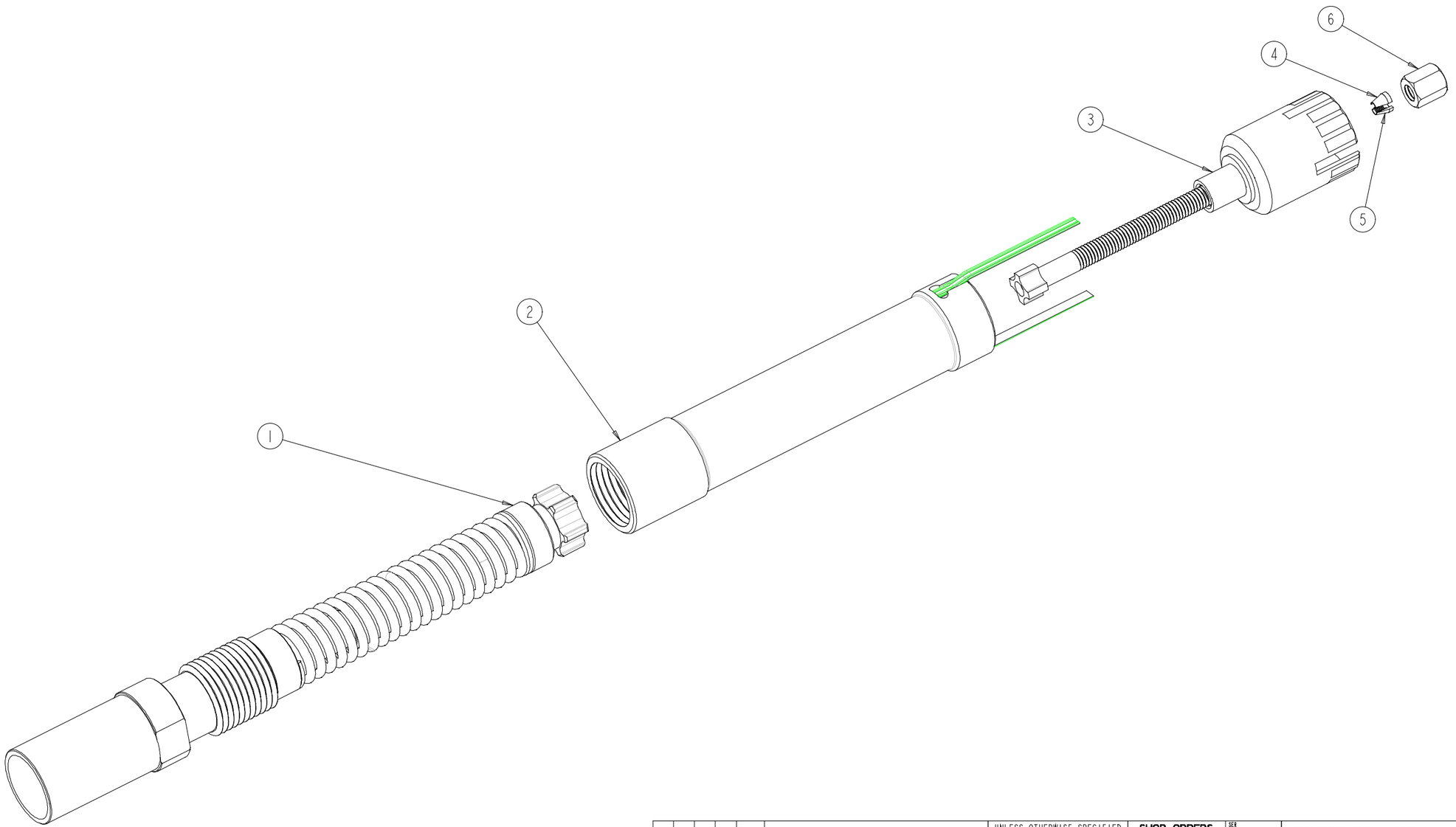

REV	DWG	CHK	ZONE	DATE	CHANGES

UNLESS OTHERWISE SPECIFIED

TOLERANCES

X.X ± 0.25	FRAC. ± 1/64
X.XX ± 0.10	Angles ± 0.50°
X.XXX ± 0.05	FINISH 125 (Ra)

DO NOT SCALE PRINT

THREADS ARE CLASS 2
CHAMFER ENDS OF ALL SCREW THEADS 30°
CUT ROUND, 1.5 THREAD RELIEF ON MACHINED THREADS
BREAK EDGES .016 MAX. ON MACHINED WORK
REMOVE BURRS, WELD SPLATTER & LOOSE SCALE
IN ACCORDANCE WITH ASME Y14.5M & B46.1

SHOP ORDERS

ACCT NO.	NO. REQD 4	SER NO.	-
DEL TO	E Anderssen	DATE ISSD	-
SURFACE TREATMT		DATE REQD	-
IDENT METHOD	TAG		
PROJECT NUMBER			
PROJECT NAME			
DWG BY	D Uken	DATE	21-Mar-03
CHK BY	N Hartman	DATE	
APR BY	E Anderssen	DATE	

ERNEST ORLANDO LAWRENCE BERKELEY NATIONAL LABORATORY
UNIVERSITY OF CALIFORNIA - BERKELEY

ATLAS PIXEL DETECTOR
BEAM PIPE AND SERVICES SUPPORT
Tension Mechanism

MICROFILMED:	DWG. TYPE	SHOWN ON	SCALE: 2.000	DO NOT SCALE PRINTS
	ASSEM	250150 250 51	SHEET 1 OF 2	

PATENT CLEAR:	DESIGN ACCT. NO.	CATEGORY CODE	DWG. NO.	SIZE	REV.
	See Web JOB	API300	2500404		1

Pro/E File: 2500404_Rev4.1 File: 2500404

DWG. NO.	SIZE	REV.	SH.
2500404		1	2

ITEM	PART NO	REQD	DESCRIPTION	MATERIAL
5	250050	1	Collet Cap	304 Stainless Steel
4	250049	2	Collet Cable Grip	Aluminum 6061-T6
3	250084	1	Adjuster Assembly	
2	250043	1	Flex Circuit Installation on Spring Plunger Retainer	
1	250041	1	Spring Plunger and Mount Bushing	

GAP AND CLEARANCE ANALYSIS:

(A) Cable tension adjustment - increase: >17 mm {9mm (beampipe align) + 5mm (cable slack) + 3mm (clearance)}

(B) Cable tension adjustment - decrease: >12 mm {9mm (beampipe align) + 3mm (clearance)}

(C) Bakeout overload motion allowance: 4mm

(D) Spring pre-load adjustment - increase: >8mm {6mm (7kg to 10kg adjustment) + 2mm (10% spring tolerance)}

(E) Spring pre-load adjustment - decrease: >6mm {4mm (plunger pilot engagement) + 2mm (10% spring tolerance)}

(F) Spring plunger travel: >11mm {6mm (7kg to 10kg adj) + 4mm (bakeout) + 1mm (clearance)}

(G) Spring preload dimension for 7 kilogram preset

(H) Adjuster assembly preset dimension

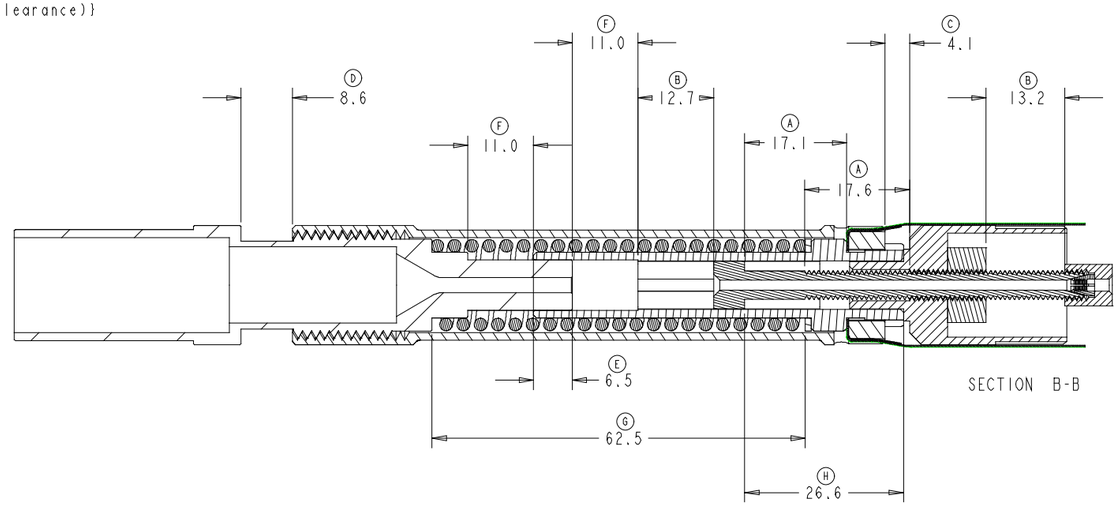

SECTION B-B

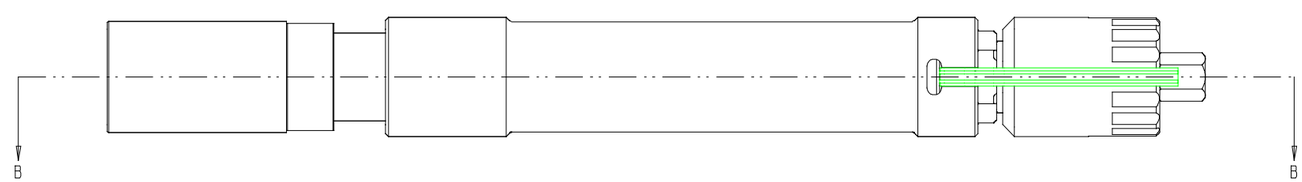

REV	DWG	CHK	ZONE	DATE	CHANGES

UNLESS OTHERWISE SPECIFIED

TOLERANCES: X.X ± 0.5 | FRAC. ± 1/64 | X.XX ± 0.05 | Angles ± 0.50° | X.XXX ± 0.01 | FINISH 125 √RMS

DO NOT SCALE PRINT

THREADS ARE CLASS 2
CHAMFER ENDS OF ALL SCREW THEADS 30°
CUT ROUND, 1.5 THREAD RELIEF ON MACHINED THREADS
BREAK EDGES .016 MAX. ON MACHINED WORK
REMOVE BURRS, WELD SPLATTER & LOOSE SCALE
IN ACCORDANCE WITH ASME Y14.5M & B46.1

SHOP ORDERS

ACCT NO.	NO. REQD 4	SER NO.	-
DEL TO	E Anderssen	DATE ISSD	-
SURFACE TREATMT		DATE REQD	-
IDENT METHOD	TAG		
PROJECT NUMBER			
PROJECT NAME			
DWG BY	D Uken	DATE	21-Mar-03
CHK BY	N Hartman	DATE	
APR BY	E Anderssen	DATE	

ERNEST ORLANDO LAWRENCE BERKELEY NATIONAL LABORATORY
UNIVERSITY OF CALIFORNIA - BERKELEY

ATLAS PIXEL DETECTOR
BEAM PIPE AND SERVICES SUPPORT
Tension Mechanism

MICROFILMED:	DWG. TYPE	SHOWN ON	SCALE: 2.000	DO NOT SCALE PRINTS
	ASSEM	250150 250 51	SHEET 2 OF 2	
PATENT CLEAR:	DESIGN ACCT. NO.	CATEGORY CODE	DWG. NO.	SIZE / REV.
	See Web JOA	PI300	2500404	1

DWG. NO.	SIZE	REV.	SH.
2500412		1	1

ITEM	PART NO	REQD	DESCRIPTION	MATERIAL
4	250044		Spring Plunger	Aluminum 6061-T6
3	250045		Thrust Washer	Aluminum 6061-T6
2	ASR_C0600_081_3000_SS		Stainless Steel Compressoin Spring	Stainless Steel
1	250183		Tension Mechanism Mount Bushing	Aluminum 6061-T6

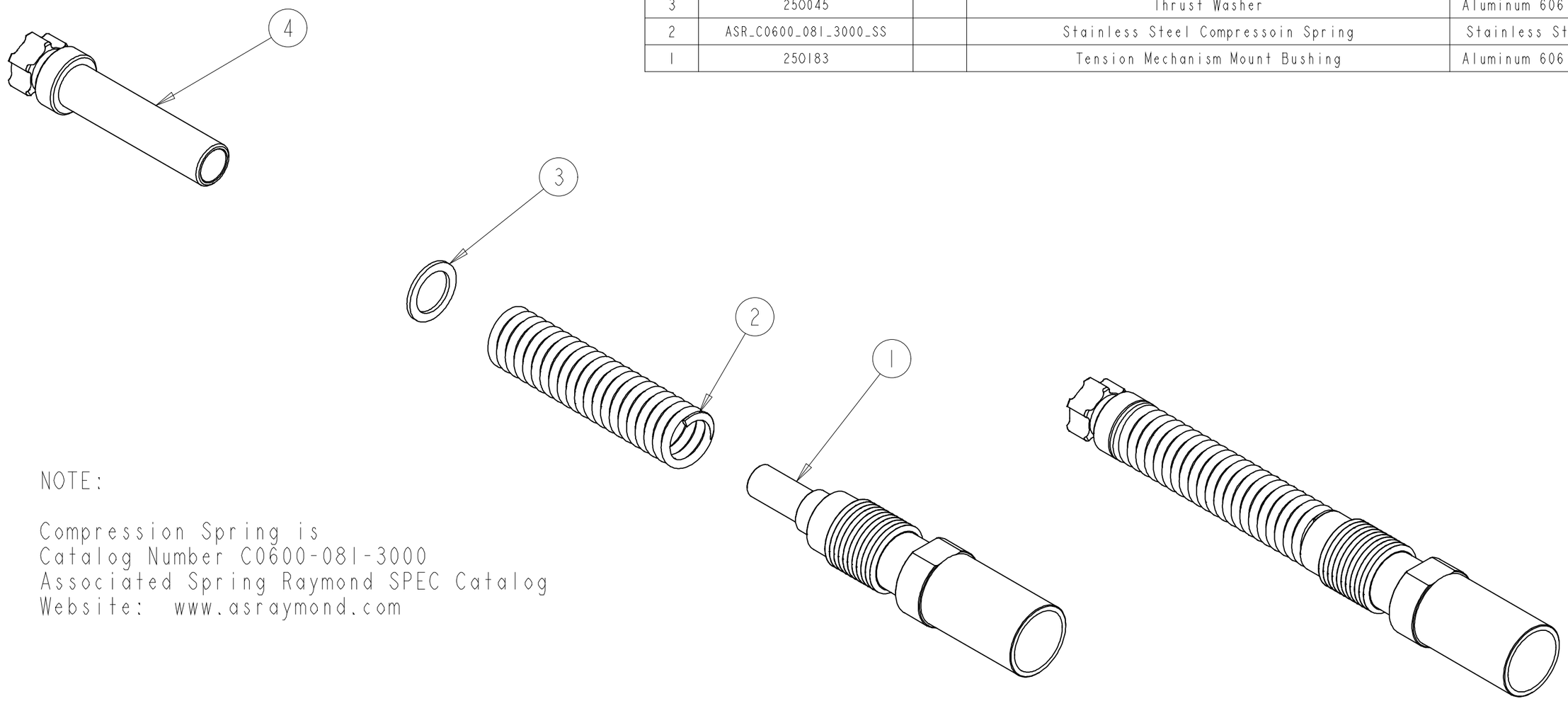

NOTE:

Compression Spring is
Catalog Number C0600-081-3000
Associated Spring Raymond SPEC Catalog
Website: www.asraymond.com

REV	DWG	CHK	ZONE	DATE	CHANGES

UNLESS OTHERWISE SPECIFIED

TOLERANCES		
	X.X ± 0.25	FRAC. ± 1/64
	X.XX ± 0.10	Angles ± 0.50°
	X.XXX ± 0.05	FINISH 125 √(µin)

DO NOT SCALE PRINT

THREADS ARE CLASS 2
CHAMFER ENDS OF ALL SCREW TREADS 30°
CUT ROUND, 1.5 THREAD RELIEF ON MACHINED THREADS
BREAK EDGES .016 MAX. ON MACHINED WORK
REMOVE BURRS, WELD SPLATTER & LOOSE SCALE
IN ACCORDANCE WITH ASME Y14.5M & B46.1

SHOP ORDERS

ACCT NO.	NO. REQD 1	SER NO.	-
DEL TO	N Hartman	DATE ISSD	-
SURFACE TREATMT		DATE REQD	-
IDENT METHOD	TAG		
PROJECT NUMBER		(logo)	
PROJECT NAME			
DWG BY	D Uken	DATE	21-Mar-03
CHK BY	N Hartman	DATE	
APR BY	E Anderssen	DATE	

ERNEST ORLANDO LAWRENCE BERKELEY NATIONAL LABORATORY
UNIVERSITY OF CALIFORNIA - BERKELEY

ATLAS PIXEL DETECTOR
TENSION MECHANISM
Spring Plunger and Mount Bushing

MICROFILMED:	DWG. TYPE	SHOWN ON	SCALE: 1.000	DO NOT SCALE PRINTS
	ASSEM	250043	SHEET 1 OF 1	
PATENT CLEAR:	DESIGN ACCT. NO.	CATEGORY CODE	DWG. NO.	SIZE / REV.
		API300	2500412	1

Rev. 1/8/2001 ATLAS

Dwg. File: 250041 Model File: 250041

DWG. NO.	SIZE	REV.	SH.
2501832		1	1

DESCRIPTION	MATERIAL	MAT. LOCATION
Lathe	Aluminum 6061-T6	-

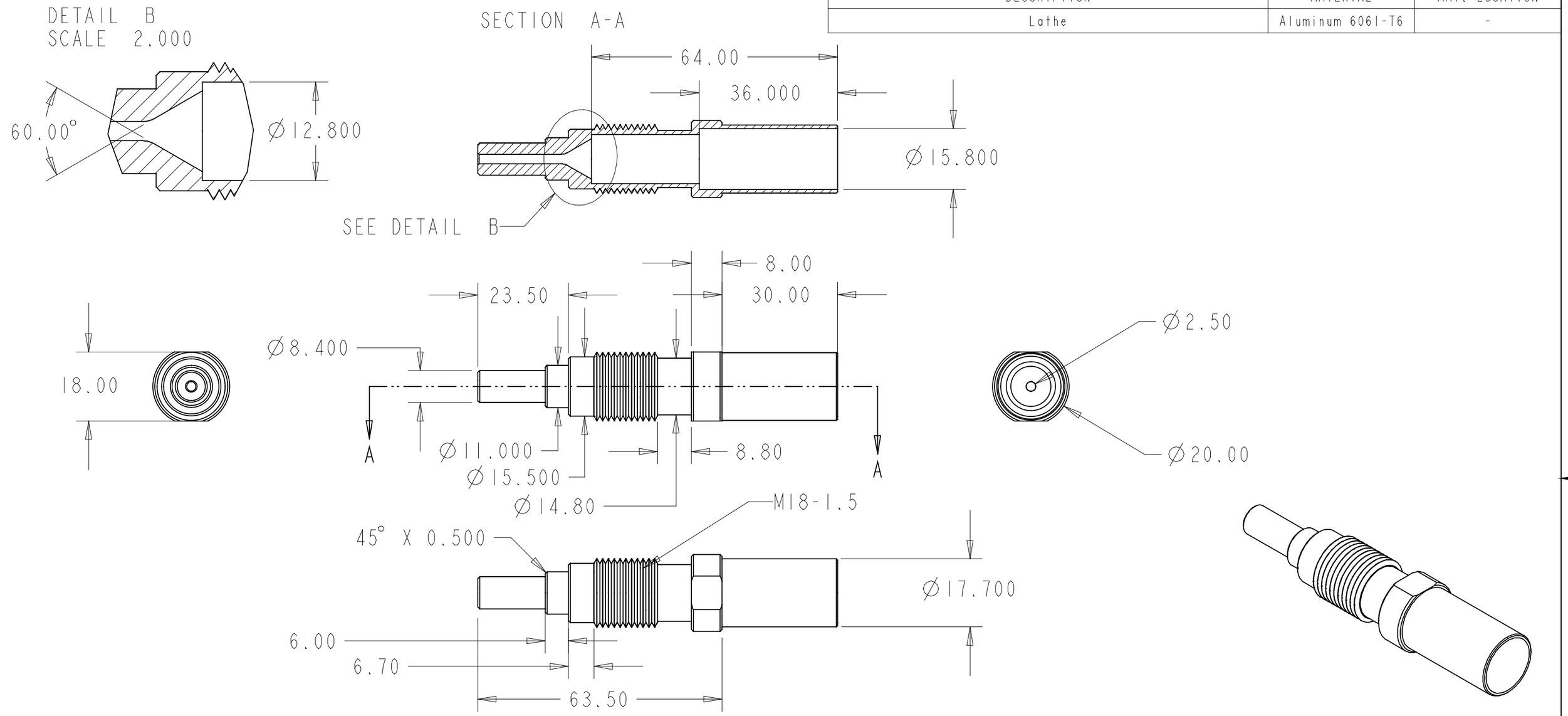

REV	DWG	CHK	ZONE	DATE	CHANGES

UNLESS OTHERWISE SPECIFIED

TOLERANCES		
	X.X ± 0.1	FRAC. ± 1/64
	X.XX ± 0.01	Angles ± 0.50°
	X.XXX ± 0.001	FINISH 125 √(μin)

DO NOT SCALE PRINT

THREADS ARE CLASS 2
CHAMFER ENDS OF ALL SCREW TREADS 30°
CUT ROUND, 1.5 THREAD RELIEF ON MACHINED THREADS
BREAK EDGES .016 MAX. ON MACHINED WORK
REMOVE BURRS, WELD SPLATTER & LOOSE SCALE
IN ACCORDANCE WITH ASME Y14.5M & B46.1

SHOP ORDERS

ACCT NO.	NO. REQD 8	SER NO.	-
DEL TO	E Anderssen	DATE ISSD	-
SURFACE TREATMT	Gold Anodize	DATE REQD	-
IDENT METHOD	TAG		
PROJECT NUMBER		(logo)	
PROJECT NAME			
DWG BY	D Uken	DATE	17-Oct-03
CHK BY	N Hartman	DATE	
APR BY	E Anderssen	DATE	

ERNEST ORLANDO LAWRENCE BERKELEY NATIONAL LABORATORY
UNIVERSITY OF CALIFORNIA - BERKELEY

ATLAS PIXEL DETECTOR
BEAM PIPE AND SERVICES SUPPORT
Tension Mechanism Mount Bushing

MICROFILMED:	DWG. TYPE	SHOWN ON	SCALE: 1.000	DO NOT SCALE PRINTS
	PART	250040 250051	SHEET 1 OF 1	
PATENT CLEAR:	DESIGN ACCT. NO.	CATEGORY CODE	DWG. NO.	SIZE / REV.
	See WebJO	AP1000	2501832	1

Dwg. File: 250183 Model File: 250183

Rev. 1/8/2001 ATLAS

DWG. NO.	SIZE	REV.	SH.
2500452	1	1	

DESCRIPTION	MATERIAL	MAT. LOCATION
	Aluminum 6061-T6	-

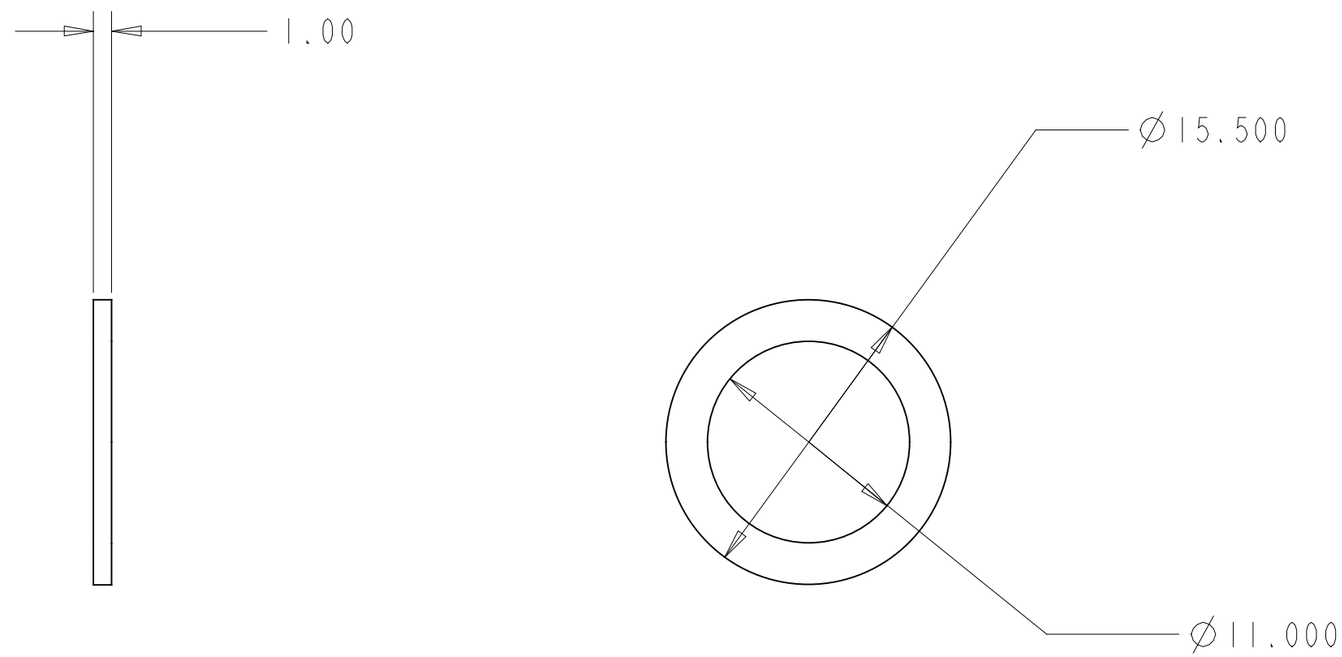

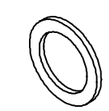

SCALE 1.000

REV	DWG	CHK	ZONE	DATE	CHANGES

UNLESS OTHERWISE SPECIFIED

TOLERANCES		
	X.X ± 0.25	FRAC. ± 1/64
	X.XX ± 0.10	Angles ± 0.50°
	X.XXX ± 0.05	FINISH 125 √(μin)

DO NOT SCALE PRINT

THREADS ARE CLASS 2
CHAMFER ENDS OF ALL SCREW TREADS 30°
CUT ROUND, 1.5 THREAD RELIEF ON MACHINED THREADS
BREAK EDGES .016 MAX. ON MACHINED WORK
REMOVE BURRS, WELD SPLATTER & LOOSE SCALE
IN ACCORDANCE WITH ASME Y14.5M & B46.1

SHOP ORDERS

SER NO.	-		
ACCT NO.		NO. REQD	DATE ISSD -
DEL TO	N Hartman		DATE REQD -
SURFACE TREATMT	Hard Anodize		
IDENT METHOD	TAG		
PROJECT NUMBER			(logo)
PROJECT NAME			
DWG BY	D Uken		DATE 21-Mar-03
CHK BY	N Hartman		DATE
APR BY	E Anderssen		DATE

ERNEST ORLANDO LAWRENCE BERKELEY NATIONAL LABORATORY
UNIVERSITY OF CALIFORNIA - BERKELEY

ATLAS PIXEL DETECTOR
TENSION MECHANISM
Thrust Washer

MICROFILMED:	DWG. TYPE	SHOWN ON	SCALE: 3.000	DO NOT SCALE PRINTS
	PART	250041	SHEET 1 OF 1	
PATENT CLEAR:	DESIGN ACCT. NO.	CATEGORY CODE AP1300	DWG. NO. 2500452	SIZE / REV. 1

Rev. 1/8/2001 ATLAS

Dwg. File: 250045 Model File: 250045

DWG. NO.	SIZE	REV.	SH.
2500442	1	1	

DESCRIPTION	MATERIAL	MAT. LOCATION
CNC Machine	Aluminum 6061-T6	-

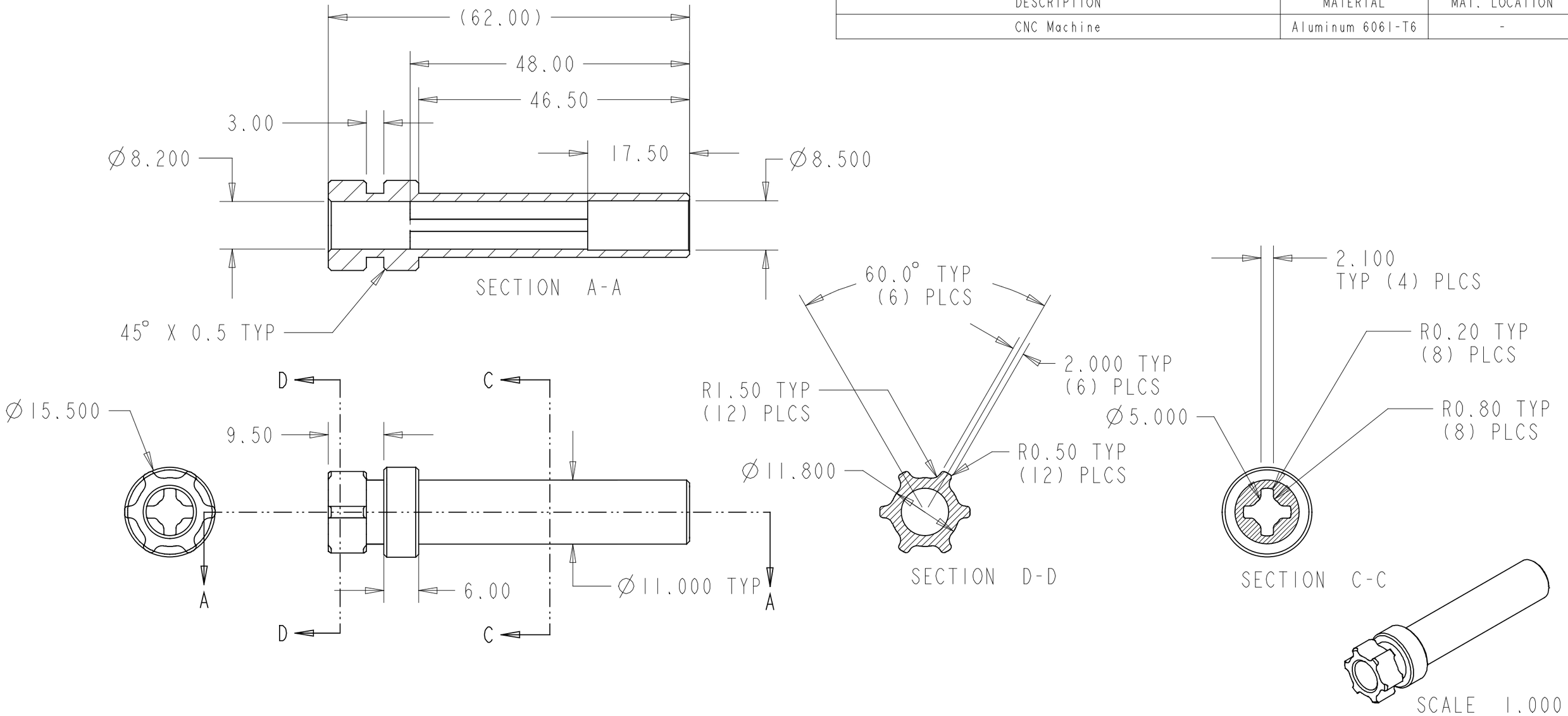

REV	DWG	CHK	ZONE	DATE	CHANGES

UNLESS OTHERWISE SPECIFIED

TOLERANCES		
	X.X ± 0.25	FRAC. ± 1/64
	X.XX ± 0.10	Angles ± 0.50°
	X.XXX ± 0.05	FINISH 125 √(μin)

DO NOT SCALE PRINT

THREADS ARE CLASS 2
CHAMFER ENDS OF ALL SCREW TREADS 30°
CUT ROUND, 1.5 THREAD RELIEF ON MACHINED THREADS
BREAK EDGES .016 MAX. ON MACHINED WORK
REMOVE BURRS, WELD SPLATTER & LOOSE SCALE
IN ACCORDANCE WITH ASME Y14.5M & B46.1

SHOP ORDERS

ACCT NO.		NO. REQD	
DEL TO	N Hartman		
SURFACE TREATMT	Blue Anodize		
IDENT METHOD	TAG		
PROJECT NUMBER			
PROJECT NAME			
DWG BY	D Uken	DATE	21-Mar-03
CHK BY	N Hartman	DATE	
APR BY	E Anderssen	DATE	

SER NO. -
DATE ISSD -
DATE REQD -
(logo)

ERNEST ORLANDO LAWRENCE BERKELEY NATIONAL LABORATORY
UNIVERSITY OF CALIFORNIA - BERKELEY

ATLAS PIXEL DETECTOR
TENSION MECHANISM
Spring Plunger

MICROFILMED:	DWG. TYPE	SHOWN ON	SCALE: 1.500	DO NOT SCALE PRINTS
	PART	250041	SHEET 1 OF 1	
PATENT CLEAR:	DESIGN ACCT. NO.	CATEGORY CODE	DWG. NO.	SIZE / REV.
		AP1300	2500442	1

Rev. 1/8/2001 ATLAS

Dwg. File: 250044 Model File: 250044

DWG. NO.	SIZE	REV.	SH.
2500432		1	1

ITEM	PART NO	REQD	DESCRIPTION	MATERIAL
3	250057		Flex Circuit Contact Sensor	
2	250057		Flex Circuit Contact Sensor	
1	250046		Spring Plunger Capture	Aluminum 6061-T6

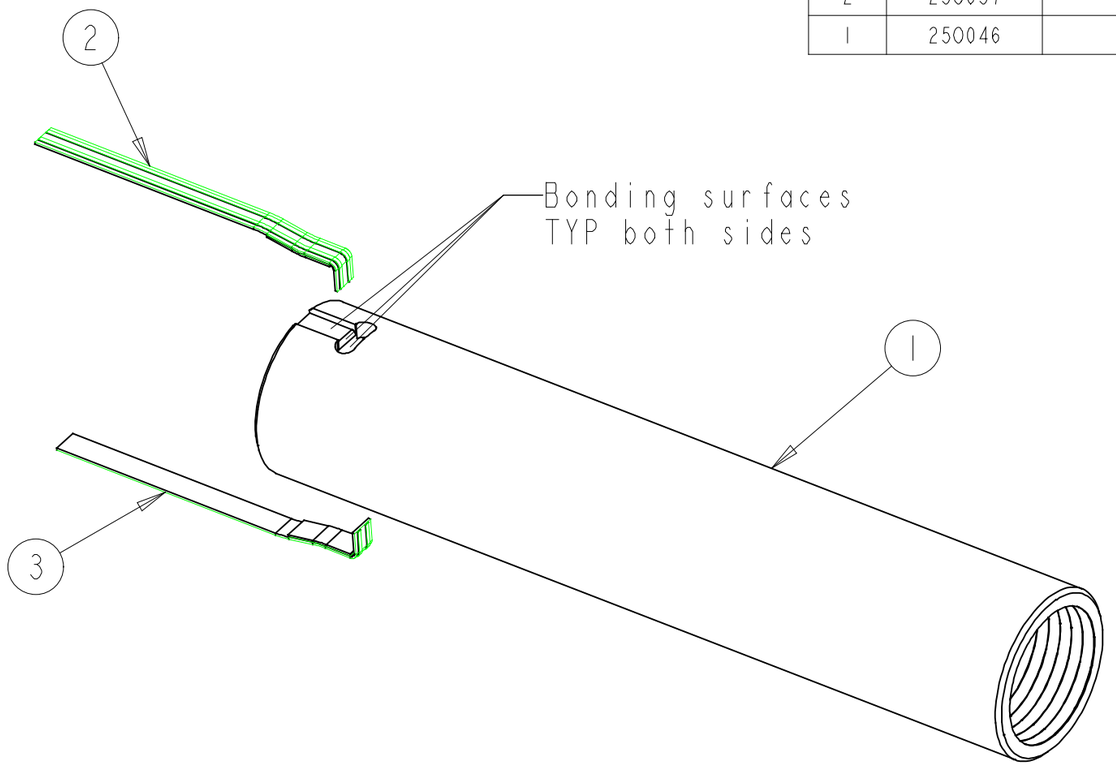

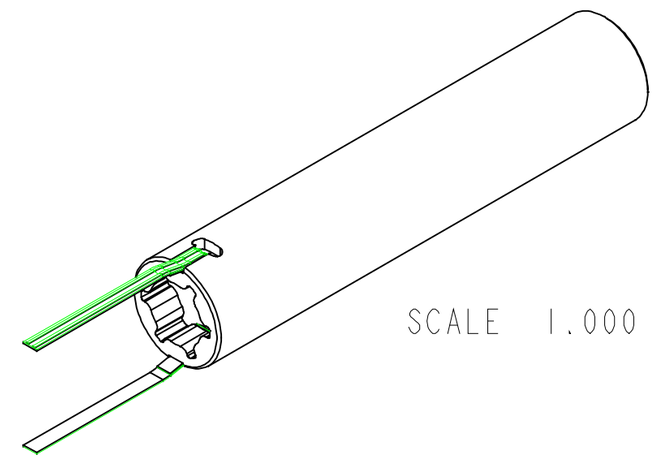

SCALE 1.000

NOTE:

Flex Circuit Assemblies should be bonded to
Spring Plunger Retainer with exposed contacts
facing the open threaded end of the part as shown.

REV	DWG	CHK	ZONE	DATE	CHANGES

UNLESS OTHERWISE SPECIFIED

TOLERANCES		
	X.X ± 0.1	FRAC. ± 1/64
	X.XX ± 0.01	Angles ± 0.50°
	X.XXX ± 0.001	FINISH 125 √(μin)

DO NOT SCALE PRINT

THREADS ARE CLASS 2
CHAMFER ENDS OF ALL SCREW TREADS 30°
CUT ROUND, 1.5 THREAD RELIEF ON MACHINED THREADS
BREAK EDGES .016 MAX. ON MACHINED WORK
REMOVE BURRS, WELD SPLATTER & LOOSE SCALE
IN ACCORDANCE WITH ASME Y14.5M & B46.1

SHOP ORDERS

SER NO.	-		
ACCT NO.		NO. REQD	1
DATE ISSD	-		
DEL TO	N Hartman	DATE REQD	-
SURFACE TREATMT			
IDENT METHOD	TAG		
PROJECT NUMBER		(logo)	
PROJECT NAME			
DWG BY	D Uken	DATE	26-Mar-03
CHK BY	N Hartman	DATE	
APR BY	E Anderssen	DATE	

ERNEST ORLANDO LAWRENCE BERKELEY NATIONAL LABORATORY
UNIVERSITY OF CALIFORNIA - BERKELEY

ATLAS PIXEL DETECTOR
TENSION MECHANISM
Flex Circuit Installation on Spring Plunger Retainer

MICROFILMED:	DWG. TYPE	SHOWN ON	SCALE: 1.500	DO NOT SCALE PRINTS
	ASSEM	250040	SHEET 1 OF 1	
PATENT CLEAR:	DESIGN ACCT. NO.	CATEGORY CODE	DWG. NO.	SIZE / REV.
		API300	2500432	1

Dwg. File: 250043 Model File: 250043

Rev. 1/8/2001 ATLAS

DWG. NO.	SIZE	REV.	SH.
2500462		1	1

DESCRIPTION	MATERIAL	MAT. LOCATION
CNC Machine, Wire EDM	Aluminum 6061-T6	-

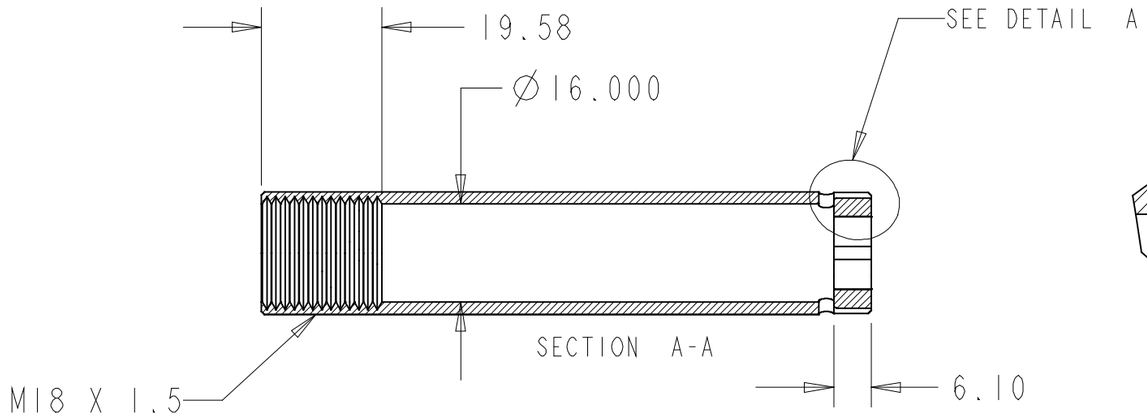

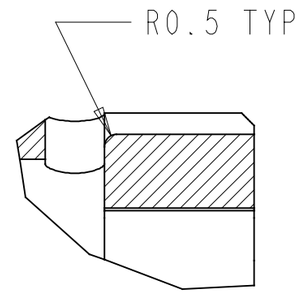

DETAIL A
SCALE 4.000

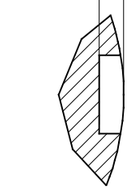

DETAIL B
SCALE 4.000

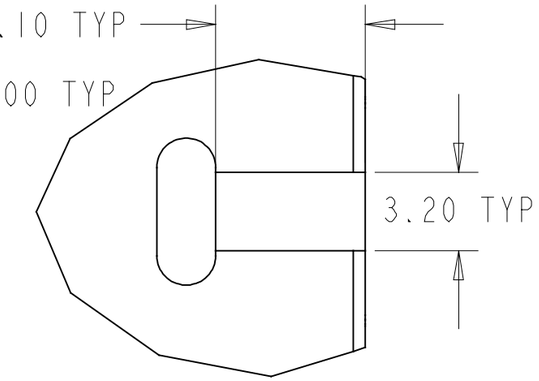

DETAIL C
SCALE 4.000

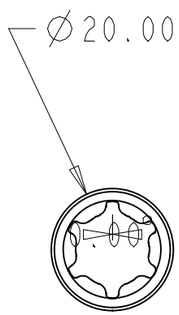

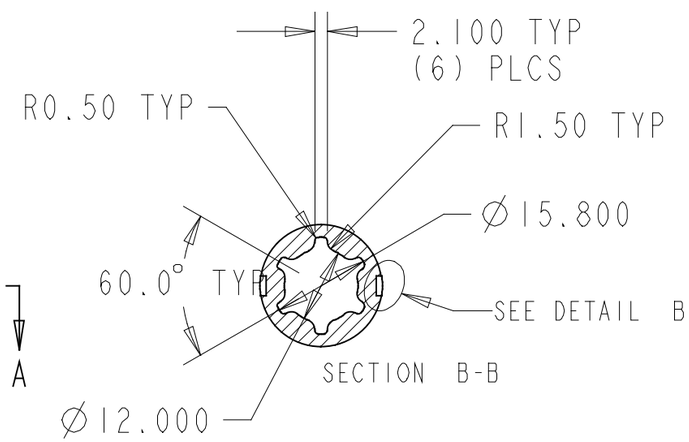

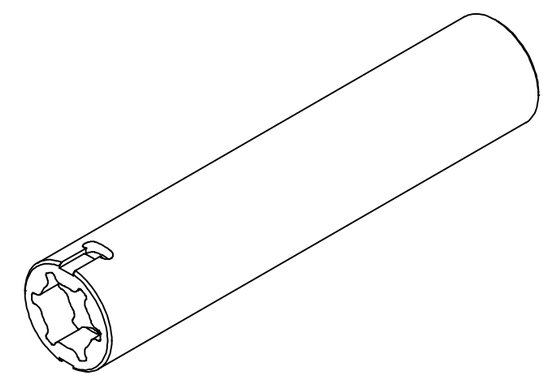

REV	DWG	CHK	ZONE	DATE	CHANGES

UNLESS OTHERWISE SPECIFIED

TOLERANCES		
	X.X ± 0.25	FRAC. ± 1/64
	X.XX ± 0.10	Angles ± 0.50°
	X.XXX ± 0.05	FINISH 125 √(µin)

DO NOT SCALE PRINT

THREADS ARE CLASS 2
CHAMFER ENDS OF ALL SCREW TREADS 30°
CUT ROUND, 1.5 THREAD RELIEF ON MACHINED THREADS
BREAK EDGES .016 MAX. ON MACHINED WORK
REMOVE BURRS, WELD SPLATTER & LOOSE SCALE
IN ACCORDANCE WITH ASME Y14.5M & B46.1

SHOP ORDERS

ACCT NO.		NO. REQD	
DEL TO	N Hartman		
SURFACE TREATMT	Gold Anodize		
IDENT METHOD	TAG		
PROJECT NUMBER			
PROJECT NAME			
DWG BY	D Uken	DATE	21-Mar-03
CHK BY	N Hartman	DATE	
APR BY	E Anderssen	DATE	

SER NO. -
DATE ISSD -
DATE REQD -
(logo)

ERNEST ORLANDO LAWRENCE BERKELEY NATIONAL LABORATORY
UNIVERSITY OF CALIFORNIA - BERKELEY

ATLAS PIXEL DETECTOR
TENSION MECHANISM
Spring Plunger Retainer

MICROFILMED:	DWG. TYPE	SHOWN ON	SCALE: 1.000	DO NOT SCALE PRINTS
	PART	250043	SHEET 1 OF 1	
PATENT CLEAR:	DESIGN ACCT. NO.	CATEGORY CODE	DWG. NO.	SIZE / REV.
		API300	2500462	1

Rev. 1/8/2001 ATLAS

Dwg. File: 250046 Model File: 250046

DWG. NO. 2500572 | SIZE | REV. | SH. 1

ITEM	PART NO	REQD	DESCRIPTION	MATERIAL
3	250059		Flex Circuit Conductor	
2	250059		Flex Circuit Conductor	
1	250058		Flex Circuit Substrate	

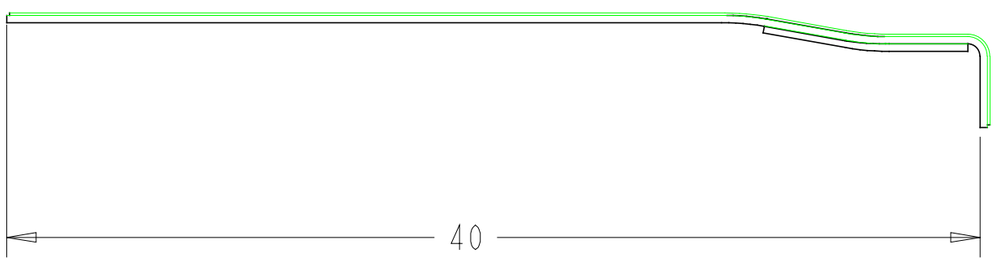

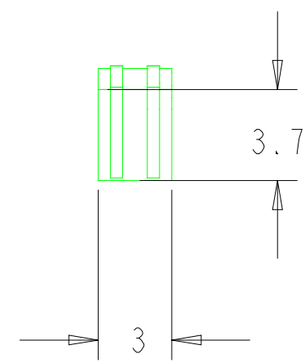

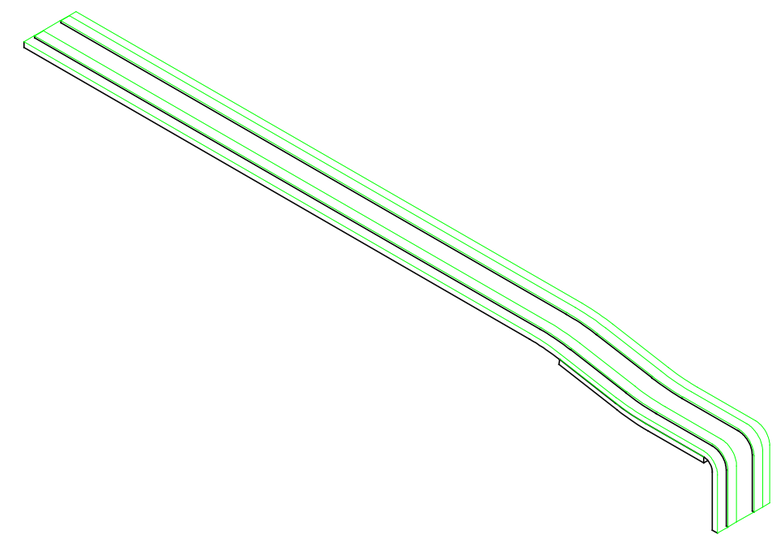

SCALE 4.000

REV	DWG	CHK	ZONE	DATE	CHANGES

UNLESS OTHERWISE SPECIFIED

TOLERANCES		
	X.X ± 0.25	FRAC. ± 1/64
	X.XX ± 0.10	Angles ± 0.50°
	X.XXX ± 0.05	FINISH 125 √(μin)

DO NOT SCALE PRINT

THREADS ARE CLASS 2
CHAMFER ENDS OF ALL SCREW TREADS 30°
CUT ROUND, 1.5 THREAD RELIEF ON MACHINED THREADS
BREAK EDGES .016 MAX. ON MACHINED WORK
REMOVE BURRS, WELD SPLATTER & LOOSE SCALE
IN ACCORDANCE WITH ASME Y14.5M & B46.1

SHOP ORDERS

ACCT NO.		NO. REQD 2	SER NO. -
DEL TO	N Hartman		DATE ISSD -
SURFACE TREATMT			DATE REQD -
IDENT METHOD	TAG		
PROJECT NUMBER			(logo)
PROJECT NAME			
DWG BY	D Uken		DATE 24-Mar-03
CHK BY	N Hartman		DATE
APR BY	E Anderssen		DATE

ERNEST ORLANDO LAWRENCE BERKELEY NATIONAL LABORATORY
UNIVERSITY OF CALIFORNIA - BERKELEY

ATLAS PIXEL DETECTOR
TENSION MECHANISM
Flex Circuit Contact Sensor

MICROFILMED:	DWG. TYPE	SHOWN ON	SCALE: 4.000	DO NOT SCALE PRINTS
	ASSEM	250043	SHEET 1 OF 1	
PATENT CLEAR:	DESIGN ACCT. NO.	CATEGORY CODE	DWG. NO.	SIZE / REV.
		API300	2500572	

Rev. 1/8/2001 ATLAS

Dwg. File: 250057 Model File: 250057

DWG. NO.	SIZE	REV.	SH.
2500844		1	1

ITEM	PART NO	REQD	DESCRIPTION	MATERIAL
3	250082		Adjuster Lock Nut	304 Stainless Steel
2	250047		Tension Adjuster	Aluminum 6061-T6
1	250048		Collet Holder Screw	304 Stainless Steel

SECTION A-A

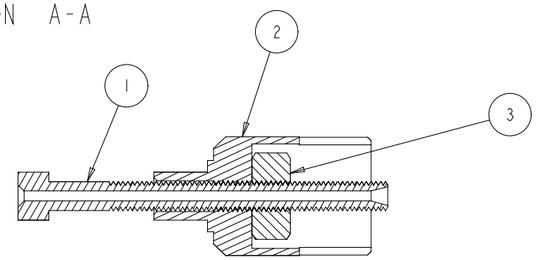

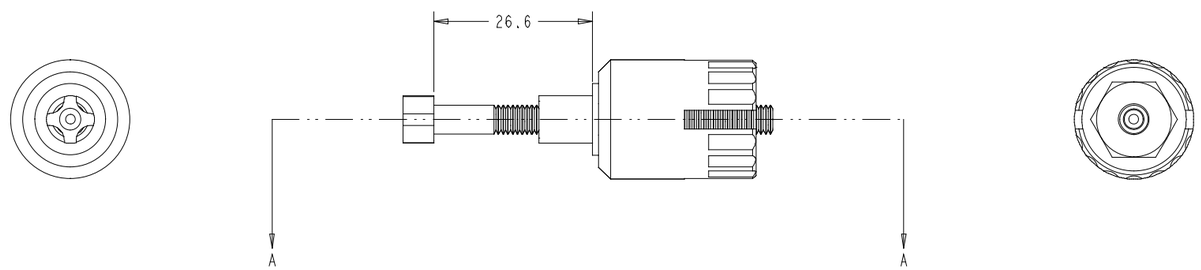

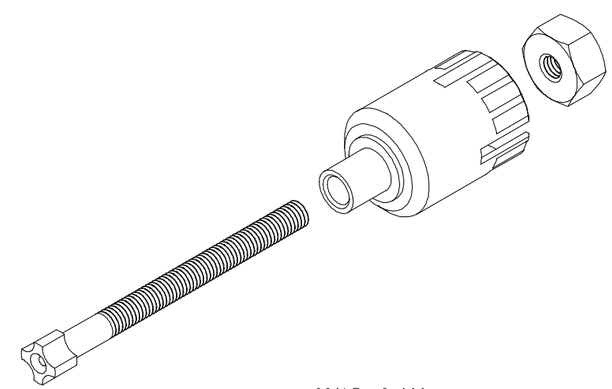

SCALE 2.000

REV	DWG	CHK	ZONE	DATE	CHANGES

UNLESS OTHERWISE SPECIFIED

TOLERANCES: X.X ± 0.25 FRAC. ± 1/64; X.XX ± 0.10 Angles ± 0.50°; X.XXX ± 0.05 FINISH 125 √(μin)

DO NOT SCALE PRINT

THREADS ARE CLASS 2
CHAMFER ENDS OF ALL SCREW TREADS 30°
CUT ROUND, 1.5 THREAD RELIEF ON MACHINED THREADS
BREAK EDGES .016 MAX. ON MACHINED WORK
REMOVE BURRS, WELD SPLATTER & LOOSE SCALE
IN ACCORDANCE WITH ASME Y14.5M & B46.1

SHOP ORDERS

SER NO.	-		
ACCT NO.	NO. REQD 1	DATE ISSD	-
DEL TO	N Hartman	DATE REQD	-
SURFACE TREATMT			
IDENT METHOD	TAG		
PROJECT NUMBER			
PROJECT NAME			
DWG BY	D Uken	DATE	24-Mar-03
CHK BY	N Hartman	DATE	
APR BY	E Anderssen	DATE	

ERNEST ORLANDO LAWRENCE BERKELEY NATIONAL LABORATORY
UNIVERSITY OF CALIFORNIA - BERKELEY

ATLAS PIXEL DETECTOR
TENSION MECHANISM
Adjuster Assembly

MICROFILMED:	DWG. TYPE	SHOWN ON	SCALE: 2.000	DO NOT SCALE PRINTS
	ASSEM	250040	SHEET 1 OF 1	
PATENT CLEAR:	DESIGN ACCT. NO.	CATEGORY CODE	DWG. NO.	SIZE / REV.
		API300	2500844	1

Reg. File: 2500844_Rev1_File_250084

DWG. NO.	SIZE	REV.	SH.
2500482	1	1	

DESCRIPTION	MATERIAL	MAT. LOCATION
	304 Stainless Steel	-

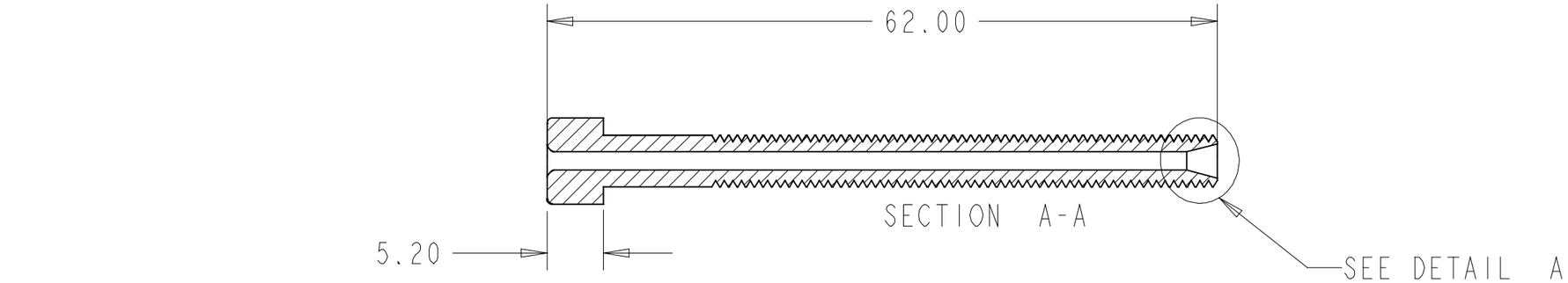

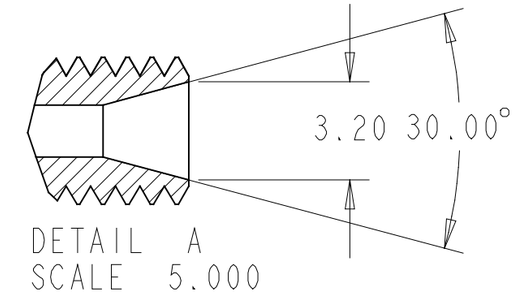

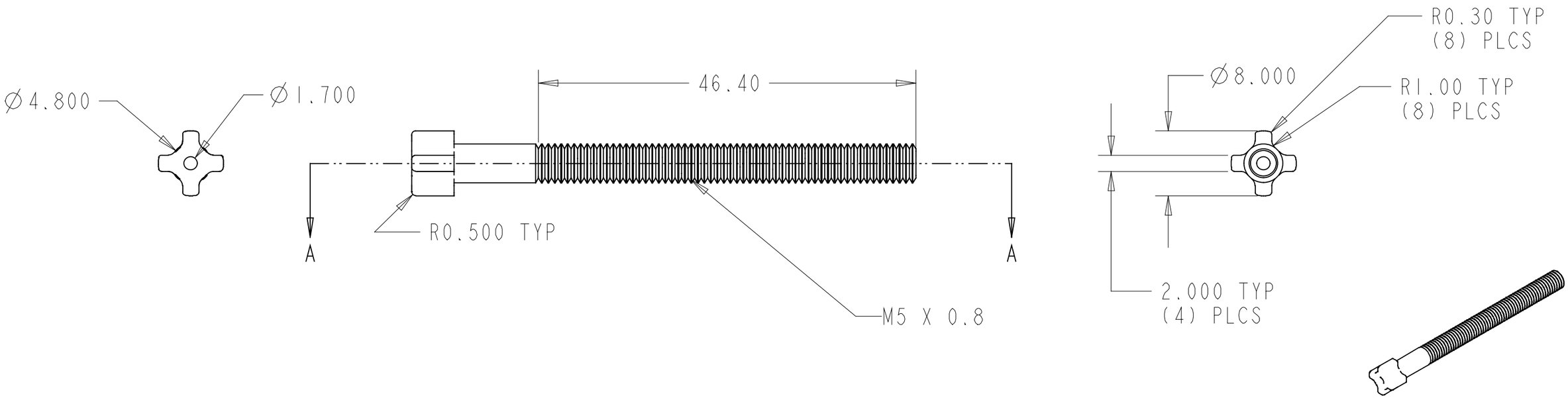

REV	DWG	CHK	ZONE	DATE	CHANGES

UNLESS OTHERWISE SPECIFIED

TOLERANCES		
	X.X ± 0.1	FRAC. ± 1/64
	X.XX ± 0.01	Angles ± 0.50°
	X.XXX ± 0.001	FINISH 125 √(µin)

DO NOT SCALE PRINT

THREADS ARE CLASS 2
CHAMFER ENDS OF ALL SCREW TREADS 30°
CUT ROUND, 1.5 THREAD RELIEF ON MACHINED THREADS
BREAK EDGES .016 MAX. ON MACHINED WORK
REMOVE BURRS, WELD SPLATTER & LOOSE SCALE
IN ACCORDANCE WITH ASME Y14.5M & B46.1

SHOP ORDERS

ACCT NO.	NO. REQD 2	SER NO.	-
DEL TO	N Hartman	DATE ISSD	-
SURFACE TREATMT		DATE REQD	-
IDENT METHOD	TAG		
PROJECT NUMBER		(logo)	
PROJECT NAME			
DWG BY	D Uken	DATE	28-Mar-03
CHK BY	N Hartman	DATE	
APR BY	E Anderssen	DATE	

ERNEST ORLANDO LAWRENCE BERKELEY NATIONAL LABORATORY
UNIVERSITY OF CALIFORNIA - BERKELEY

ATLAS PIXEL DETECTOR
TENSION MECHANISM
Collet Holder Screw

MICROFILMED:	DWG. TYPE	SHOWN ON	SCALE: 2.000	DO NOT SCALE PRINTS
	PART	250084	SHEET 1 OF 1	
PATENT CLEAR:	DESIGN ACCT. NO.	CATEGORY CODE	DWG. NO.	SIZE / REV.
		API300	2500482	1

Rev. 1/8/2001 ATLAS

Dwg. File: 250048 Model File: 250048

DWG. NO.	SIZE	REV.	SH.
2500472	1	1	

DESCRIPTION	MATERIAL	MAT. LOCATION
	Aluminum 6061-T6	-

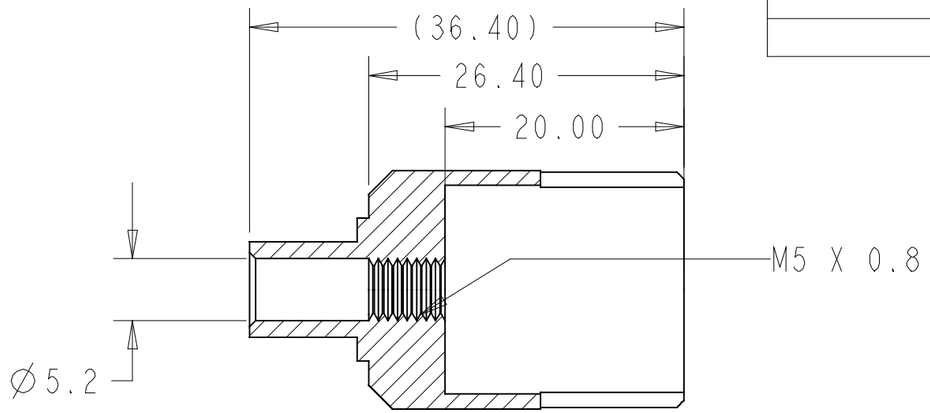

SECTION A-A

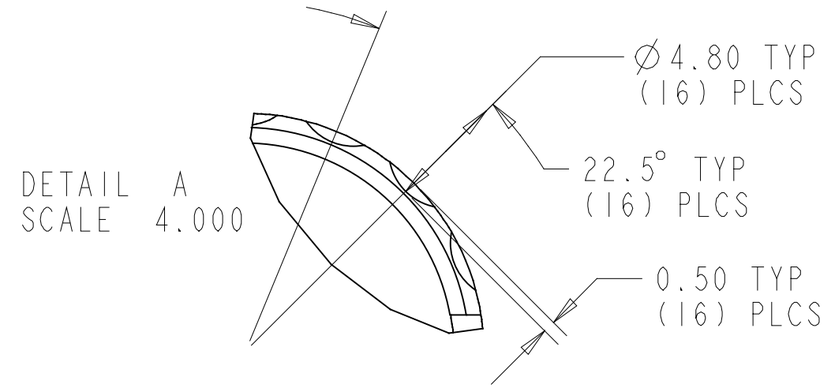

DETAIL A
SCALE 4.000

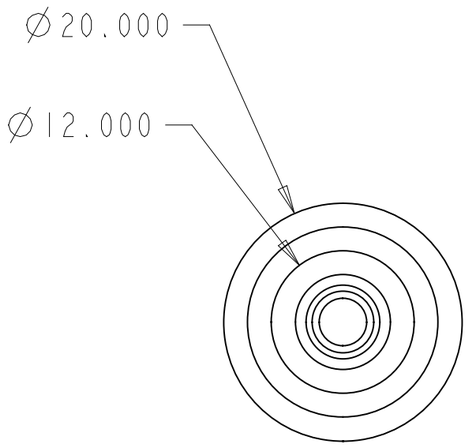

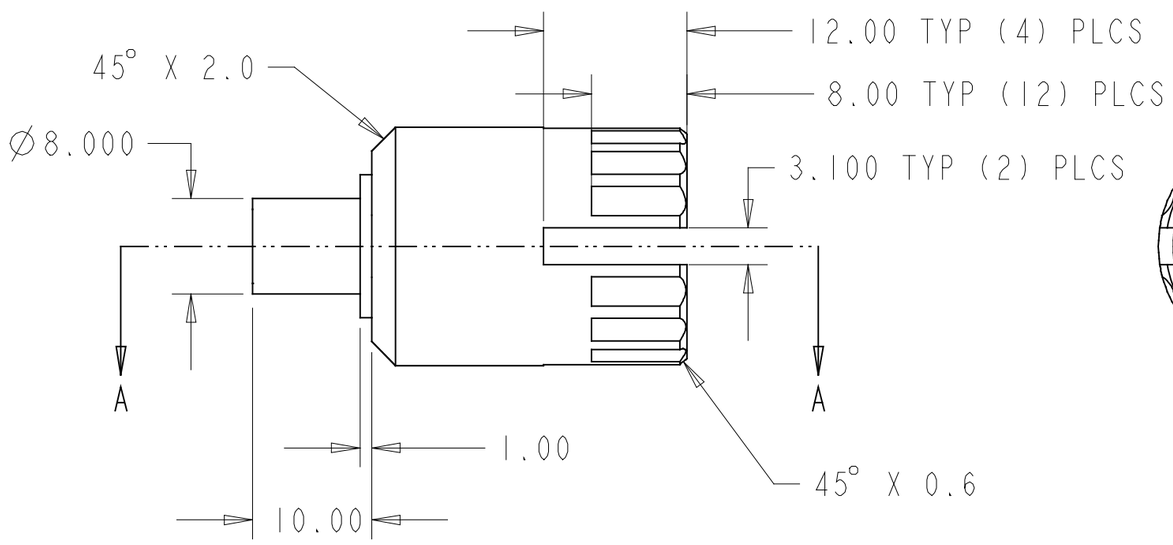

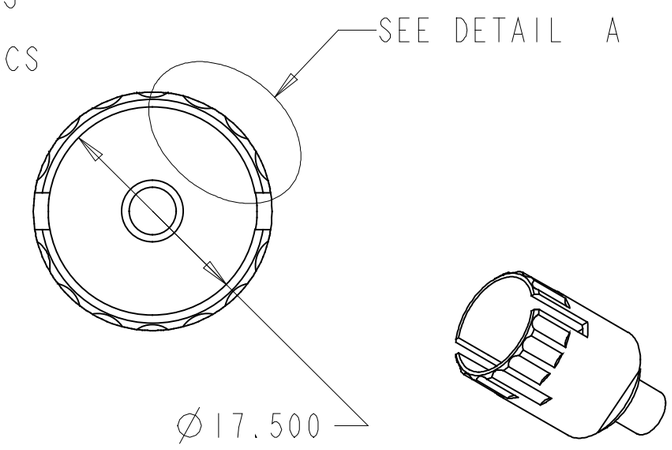

SCALE 1.000

REV	DWG	CHK	ZONE	DATE	CHANGES

UNLESS OTHERWISE SPECIFIED

TOLERANCES		
	X.X ± 0.1	FRAC. ± 1/64
	X.XX ± 0.01	Angles ± 0.50°
	X.XXX ± 0.001	FINISH 125 √ (µin)

DO NOT SCALE PRINT

THREADS ARE CLASS 2
CHAMFER ENDS OF ALL SCREW TREADS 30°
CUT ROUND, 1.5 THREAD RELIEF ON MACHINED THREADS
BREAK EDGES .016 MAX. ON MACHINED WORK
REMOVE BURRS, WELD SPLATTER & LOOSE SCALE
IN ACCORDANCE WITH ASME Y14.5M & B46.1

SHOP ORDERS

SER NO.	-		
ACCT NO.		NO. REQD	1
DATE ISSD	-		
DEL TO	N Hartman	DATE REQD	-
SURFACE TREATMT	Blue Anodize		
IDENT METHOD	TAG		
PROJECT NUMBER		(logo)	
PROJECT NAME			
DWG BY	D Uken	DATE	28-Mar-03
CHK BY	N Hartma	DATE	
APR BY	E Anderssen	DATE	

ERNEST ORLANDO LAWRENCE BERKELEY NATIONAL LABORATORY
UNIVERSITY OF CALIFORNIA - BERKELEY

ATLAS PIXEL DETECTOR
TENSION MECHANISM
Tension Adjuster

MICROFILMED:	DWG. TYPE	SHOWN ON	SCALE: 2.000	DO NOT SCALE PRINTS
	PART	250084	SHEET 1 OF 1	
PATENT CLEAR:	DESIGN ACCT. NO.	CATEGORY CODE	DWG. NO.	SIZE / REV.
		API300	2500472	1

Rev. 1/8/2001 ATLAS

Dwg. File: 250047 Model File: 250047

DWG. NO.	SIZE	REV.	SH.
2500802			1

DESCRIPTION	MATERIAL	MAT. LOCATION
		-

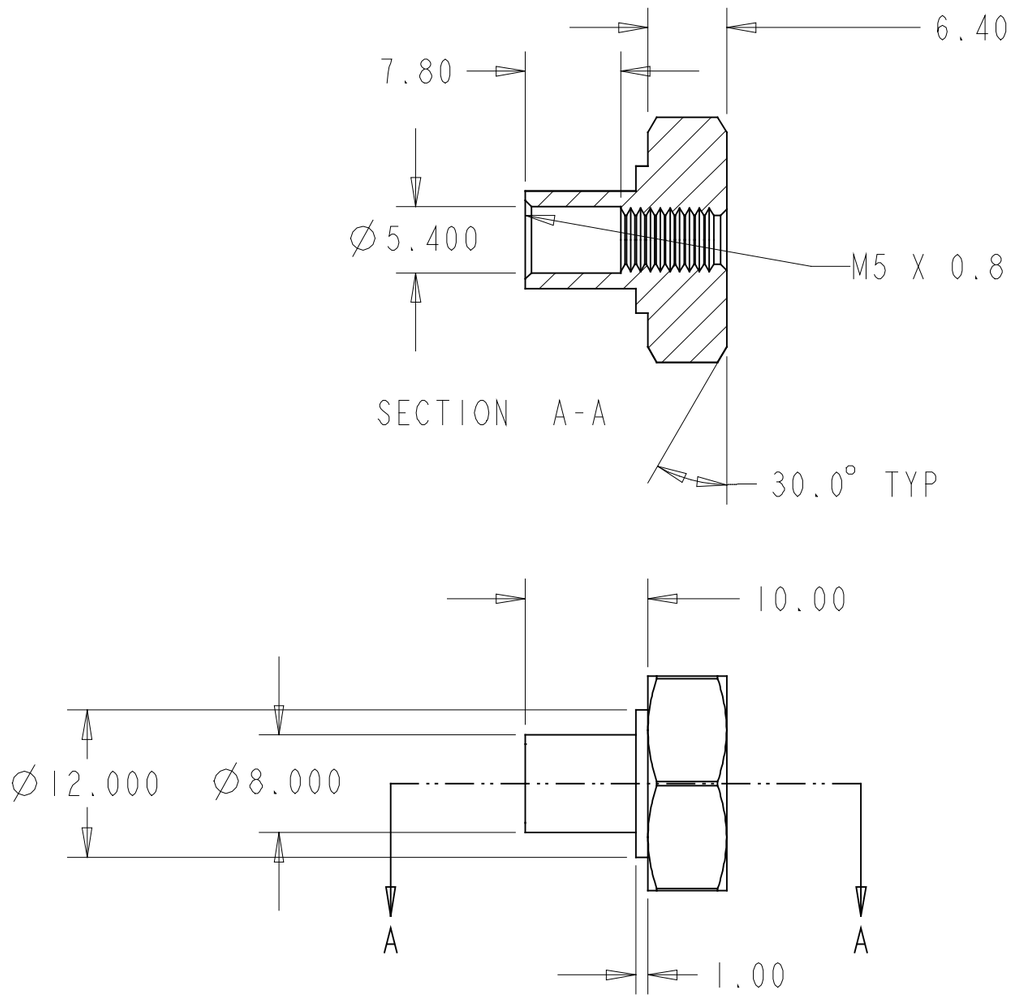

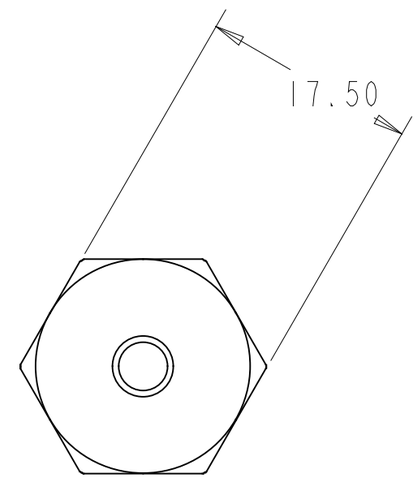

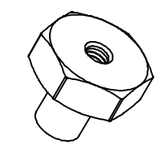

SCALE 1.000

REV	DWG	CHK	ZONE	DATE	CHANGES

UNLESS OTHERWISE SPECIFIED

TOLERANCES		
	X.X ± 0.25	FRAC. ± 1/64
	X.XX ± 0.10	Angles ± 0.50°
	X.XXX ± 0.05	FINISH 125 √(μin)

DO NOT SCALE PRINT

THREADS ARE CLASS 2
CHAMFER ENDS OF ALL SCREW TREADS 30°
CUT ROUND, 1.5 THREAD RELIEF ON MACHINED THREADS
BREAK EDGES .016 MAX. ON MACHINED WORK
REMOVE BURRS, WELD SPLATTER & LOOSE SCALE
IN ACCORDANCE WITH ASME Y14.5M & B46.1

SHOP ORDERS

ACCT NO.		NO. REQD 1	SER NO. -
DEL TO N Hartman			DATE ISSD -
			DATE REQD -
SURFACE TREATMT			
IDENT METHOD TAG			
PROJECT NUMBER			(logo)
PROJECT NAME			
DWG BY D Uken			DATE 24-Mar-03
CHK BY N Hartman			DATE
APR BY E Anderssen			DATE

ERNEST ORLANDO LAWRENCE BERKELEY NATIONAL LABORATORY
UNIVERSITY OF CALIFORNIA - BERKELEY

ATLAS PIXEL DETECTOR
TENSION MECHANISM
Adjuster Nut

MICROFILMED:	DWG. TYPE	SHOWN ON	SCALE: 2.000	DO NOT SCALE PRINTS
	PART	250084	SHEET 1 OF 1	
PATENT CLEAR:	DESIGN ACCT. NO.	CATEGORY CODE	DWG. NO.	SIZE
		API300	2500802	REV.

Rev. 1/8/2001 ATLAS

Dwg. File: 250080 Model File: 250080

DWG. NO.	SIZE	REV.	SH.
2500822			1

DESCRIPTION	MATERIAL	MAT. LOCATION
	304 Stainless Steel	-

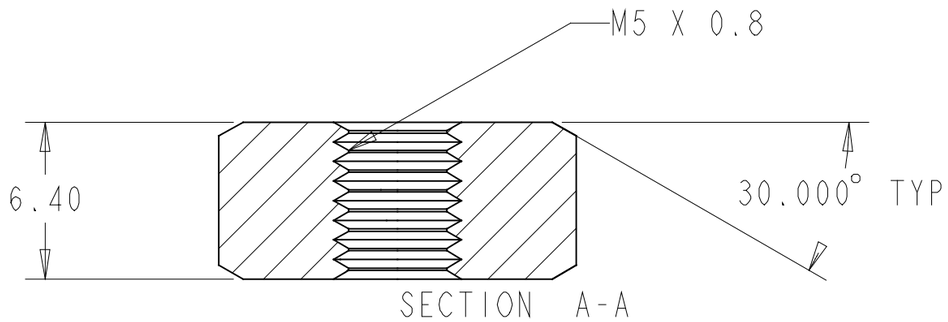

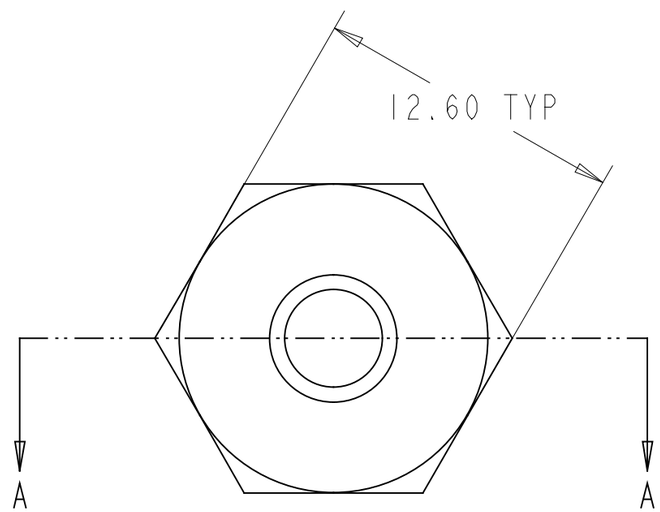

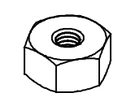

SCALE 1.000

REV	DWG	CHK	ZONE	DATE	CHANGES

UNLESS OTHERWISE SPECIFIED

TOLERANCES		
	X.X ± 0.1	FRAC. ± 1/64
	X.XX ± 0.01	Angles ± 0.50°
	X.XXX ± 0.001	FINISH 125 √ (μin)

DO NOT SCALE PRINT

THREADS ARE CLASS 2
CHAMFER ENDS OF ALL SCREW TREADS 30°
CUT ROUND, 1.5 THREAD RELIEF ON MACHINED THREADS
BREAK EDGES .016 MAX. ON MACHINED WORK
REMOVE BURRS, WELD SPLATTER & LOOSE SCALE
IN ACCORDANCE WITH ASME Y14.5M & B46.1

SHOP ORDERS

ACCT NO.	NO. REQD 2	SER NO.	-
DEL TO	N Hartman	DATE ISSD	-
SURFACE TREATMT		DATE REQD	-
IDENT METHOD	TAG		
PROJECT NUMBER		(logo)	
PROJECT NAME			
DWG BY	D Uken	DATE	31-Mar-03
CHK BY	N Hartman	DATE	
APR BY	E Anderssen	DATE	

ERNEST ORLANDO LAWRENCE BERKELEY NATIONAL LABORATORY
UNIVERSITY OF CALIFORNIA - BERKELEY

ATLAS PIXEL DETECTOR
TENSION MECHANISM
Adjuster Lock Nut

MICROFILMED:	DWG. TYPE	SHOWN ON	SCALE: 4.000	DO NOT SCALE PRINTS
	PART	250084	SHEET 1 OF 1	
PATENT CLEAR:	DESIGN ACCT. NO.	CATEGORY CODE	DWG. NO.	SIZE
		API300	2500822	REV.

Rev. 1/8/2001 ATLAS

Dwg. File: 250082 Model File: 250082

DWG. NO.	SIZE	REV.	SH.
2500492	1	1	

DESCRIPTION	MATERIAL	MAT. LOCATION
	Aluminum 6061-T6	-

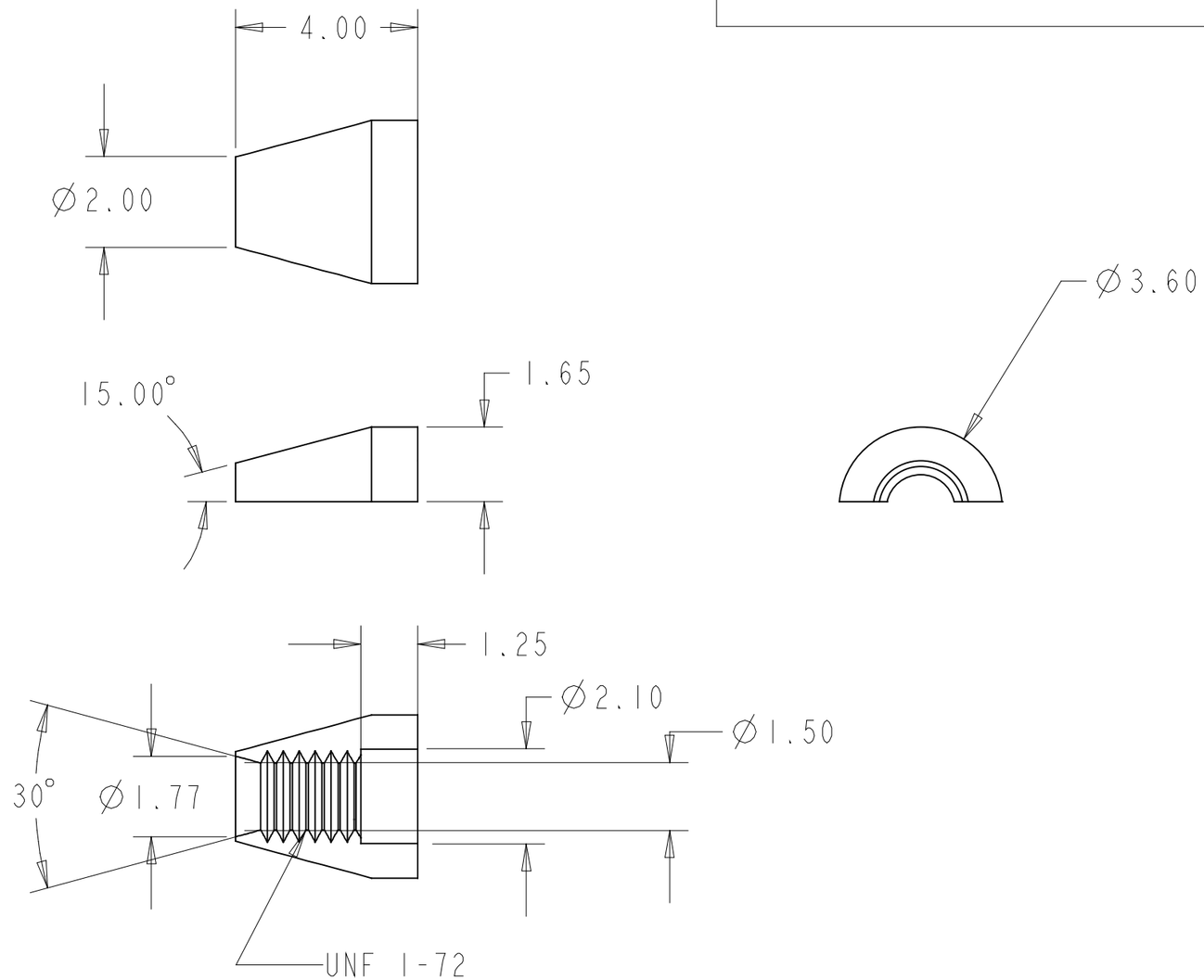

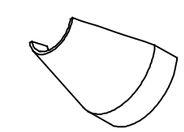

SCALE 5.000

REV	DWG	CHK	ZONE	DATE	CHANGES

UNLESS OTHERWISE SPECIFIED

TOLERANCES		
	X.X ± 0.25	FRAC. ± 1/64
	X.XX ± 0.10	Angles ± 0.50°
	X.XXX ± 0.05	FINISH 125 √(µin)

DO NOT SCALE PRINT

THREADS ARE CLASS 2
CHAMFER ENDS OF ALL SCREW TREADS 30°
CUT ROUND, 1.5 THREAD RELIEF ON MACHINED THREADS
BREAK EDGES .016 MAX. ON MACHINED WORK
REMOVE BURRS, WELD SPLATTER & LOOSE SCALE
IN ACCORDANCE WITH ASME Y14.5M & B46.1

SHOP ORDERS

ACCT NO.	NO. REQD 8	SER NO.	-
DEL TO	N Hartman	DATE ISSD	-
		DATE REQD	-
SURFACE TREATMT			
IDENT METHOD	TAG		
PROJECT NUMBER		(logo)	
PROJECT NAME			
DWG BY	D Uken	DATE	24-Mar-03
CHK BY	N Hartman	DATE	
APR BY	E Anderssen	DATE	

ERNEST ORLANDO LAWRENCE BERKELEY NATIONAL LABORATORY
UNIVERSITY OF CALIFORNIA - BERKELEY

ATLAS PIXEL DETECTOR
TENSION MECHANISM
Collet Cable Grip

MICROFILMED:	DWG. TYPE	SHOWN ON	SCALE: 8.000	DO NOT SCALE PRINTS
	PART	250040	SHEET 1 OF 1	
PATENT CLEAR:	DESIGN ACCT. NO.	CATEGORY CODE	DWG. NO.	SIZE / REV.
		API300	2500492	1

Rev. 1/8/2001 ATLAS

Dwg. File: 250049 Model File: 250049

DWG. NO.	SIZE	REV.	SH.
2500502	1	1	

DESCRIPTION	MATERIAL	MAT. LOCATION
	304 Stainless Steel	-

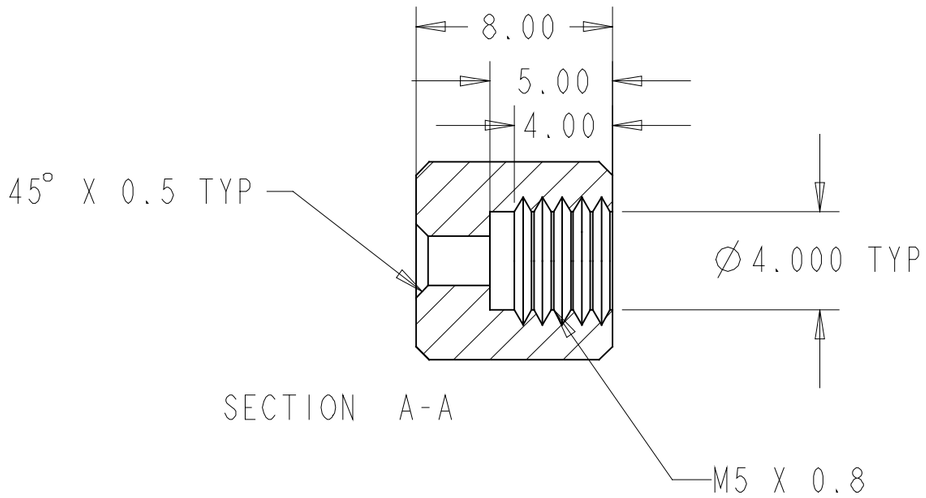

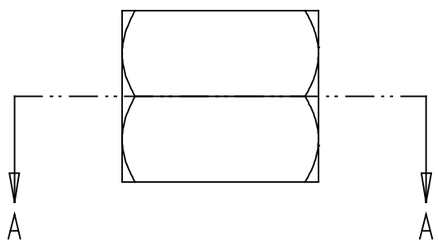

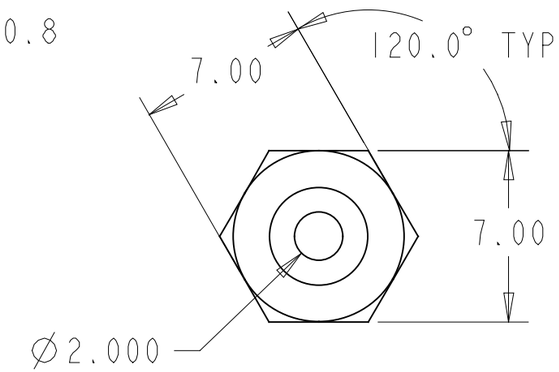

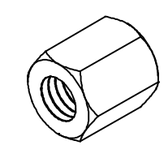

SCALE 2.000

REV	DWG	CHK	ZONE	DATE	CHANGES

UNLESS OTHERWISE SPECIFIED

TOLERANCES		
	X.X ± 0.25	FRAC. ± 1/64
	X.XX ± 0.10	Angles ± 0.50°
	X.XXX ± 0.05	FINISH 125 √(µin)

DO NOT SCALE PRINT

THREADS ARE CLASS 2
CHAMFER ENDS OF ALL SCREW TREADS 30°
CUT ROUND, 1.5 THREAD RELIEF ON MACHINED THREADS
BREAK EDGES .016 MAX. ON MACHINED WORK
REMOVE BURRS, WELD SPLATTER & LOOSE SCALE
IN ACCORDANCE WITH ASME Y14.5M & B46.1

SHOP ORDERS

ACCT NO.	NO. REQD 2	SER NO.	-
DEL TO	N Hartman	DATE ISSD	-
SURFACE TREATMT		DATE REQD	-
IDENT METHOD	TAG		
PROJECT NUMBER		(logo)	
PROJECT NAME			
DWG BY	D Uken	DATE	24-Mar-03
CHK BY	N Hartman	DATE	
APR BY	E Anderssen	DATE	

ERNEST ORLANDO LAWRENCE BERKELEY NATIONAL LABORATORY
UNIVERSITY OF CALIFORNIA - BERKELEY

ATLAS PIXEL DETECTOR
TENSION MECHANISM
Collet Cap

MICROFILMED:	DWG. TYPE	SHOWN ON	SCALE: 4.000	DO NOT SCALE PRINTS
	PART	250040	SHEET 1 OF 1	
PATENT CLEAR:	DESIGN ACCT. NO.	CATEGORY CODE	DWG. NO.	SIZE / REV.
		API300	2500502	1

Dwg. File: 250050 Model File: 250050

Rev. 1/8/2001 ATLAS