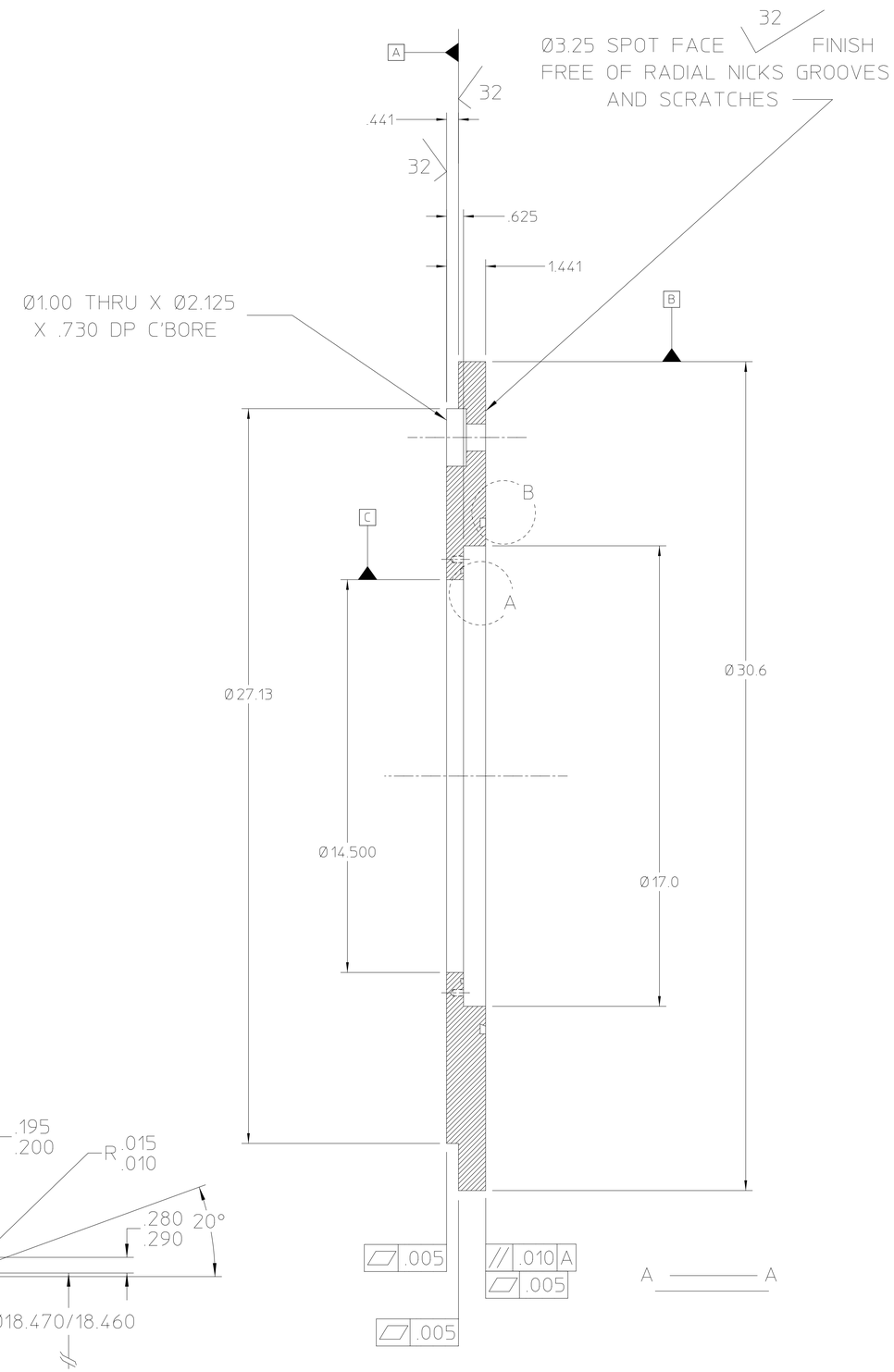

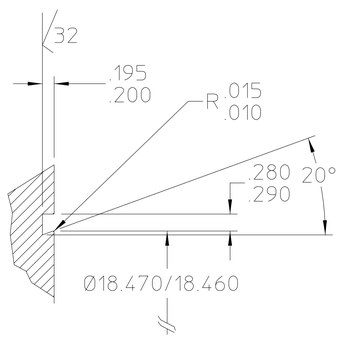

O RING GROOVE DETAIL B
2-466
SCALE 1 : 1

⊕ Ø .014 A B C

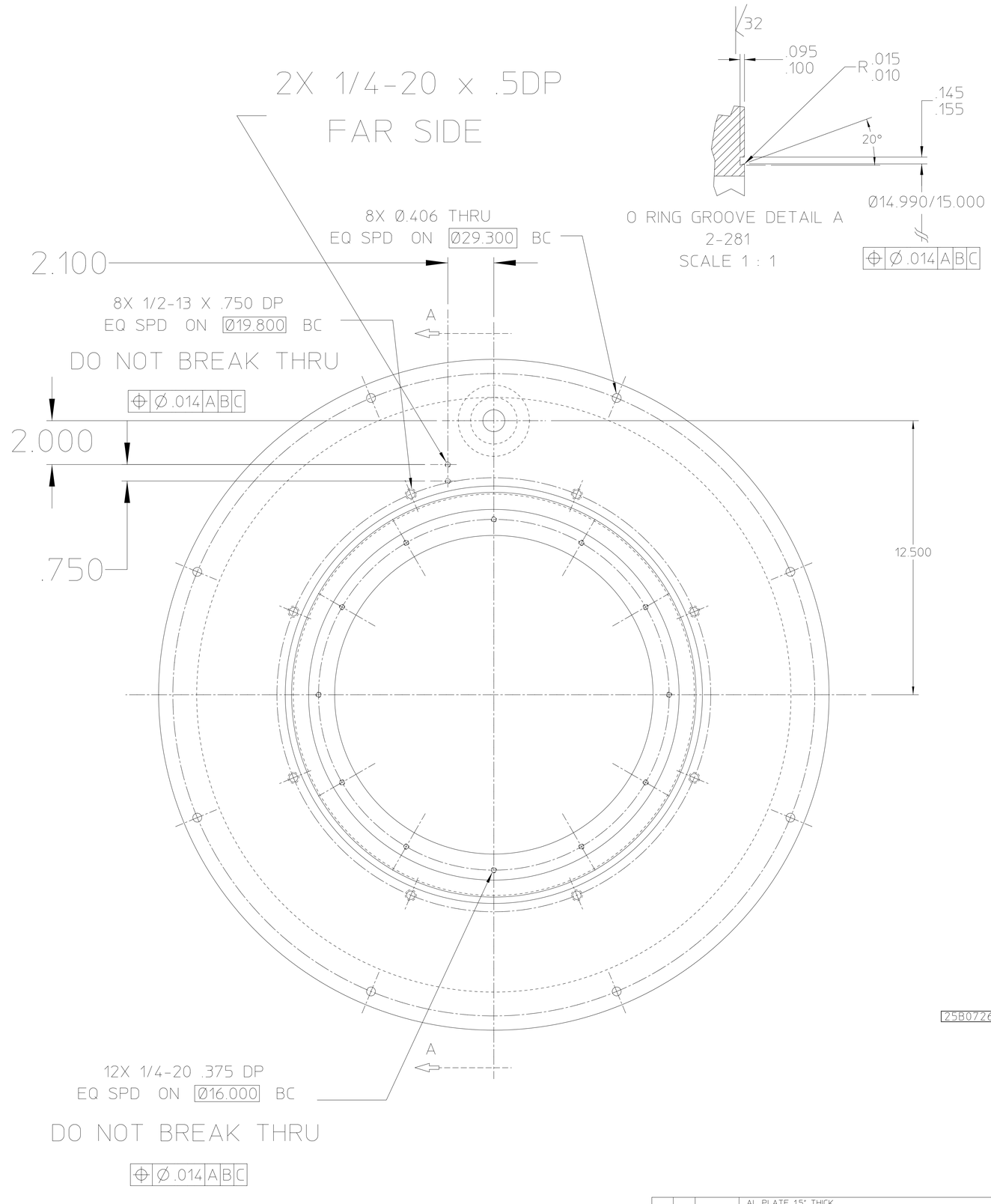

O RING GROOVE DETAIL A
2-281
SCALE 1 : 1

25B0726A

REQD	ITEM	PART NO.	DESCRIPTION
			AL PLATE 1.5" THICK

REV	DWG	CHK	ZONE	DATE	CHANGES
A	DWC		ALL	9/30/00	CORRECTED PROJECTION VIEWS

UNLESS OTHERWISE SPECIFIED
TOLERANCES: .X ± .015 FRAC. ± 1/64; .XX ± .010 ANGLES ± 1°; .XXX ± .005 FINISH 125
THREADS ARE CLASS 2
CHAMFER ENDS OF ALL SCREW THREADS 30°
CUT 1.5 PITCH THRD RELIEF WITH ROUND NOSE TOOL ON MACHINE CUT THREADS
BREAK EDGES .016 MAX. ON MACHINED WORK
REMOVE BURRS WELD SPLATTER & LOOSE SCALE
REFERENCES: ANSI Y14.5 & B46.1

SHOP ORDERS
ACCT. NO. | SERIAL NO.
DATE ISSD | DATE REQD | NO. REQD
DELIVER TO
SURFACE TREATMENT: ELECTRO POLISH
IDENT. METH.: TAG
DWG. BY: J. M. PRUYN — DATE 4/22/99
CHK BY: D. CHENG — DATE 4/23/99

LAWRENCE BERKELEY LABORATORY
UNIVERSITY OF CALIFORNIA-BERKELEY

SNS FRONT END
LEBT TEST STAND
BULKHEAD PLATE

PATENT CLEAR | DWG. TYPE: ASSEMBLY | SHOWN ON | SCALE 1 : 2 | DO NOT SCALE PRINTS
MICROFILMED | DESIGN ACCT. NO.: 821014 | CATEGORY CODE: FE1100 | DWG. NO.: 25B0726 | SIZE | REV.: A