DESCRIPTION	MATERIAL	MAT. LOCATION
SUPPLIED BY FERMI LAB	SS 300 SERIES	-

NOTES:

1. DIMENSIONS IN INCHES [mm].
2. PROVIDED FOR REFERENCE ONLY.
   NOT INTENDED FOR FABRICATION.

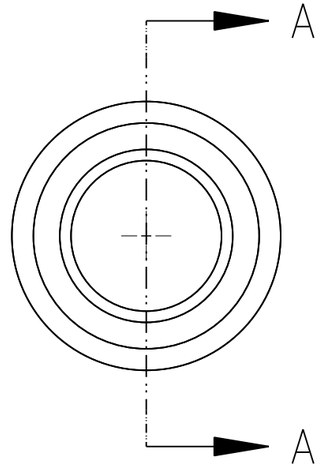

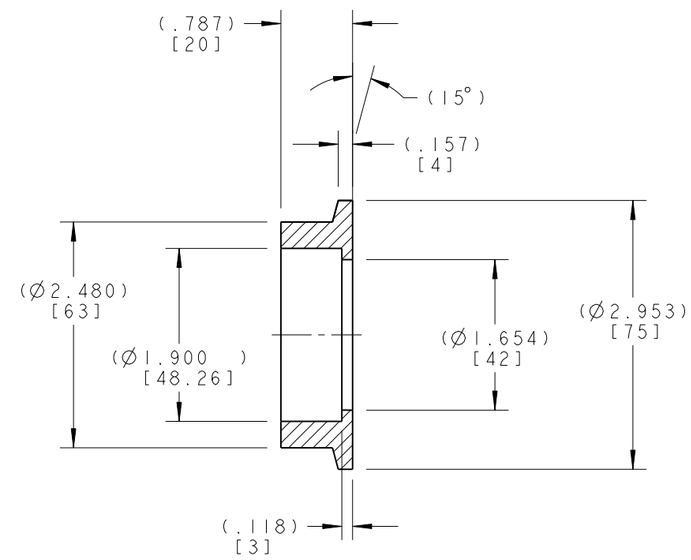

SECTION A - A

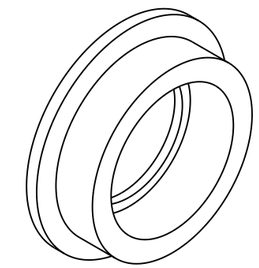

THIRD ANGLE PROJECTION

REV	DWG	CHK	ZONE	DATE	CHANGES
A		DPO			CHANGES PER PRODUCTION READINESS REVIEW

UNLESS OTHERWISE SPECIFIED

TOLERANCES		
	X.X ± 0.1	FRAC. ± 1/64
	X.XX ± 0.01	Angles ± 1.00°
	X.XXX ± 0.005	FINISH 125 (µin)

DO NOT SCALE PRINT

THREADS ARE CLASS 2
CHAMFER ENDS OF ALL SCREW TREADS 30°
CUT ROUND, 1.5 THREAD RELIEF ON MACHINED THREADS
BREAK EDGES .016 MAX. ON MACHINED WORK
REMOVE BURRS, WELD SPLATTER & LOOSE SCALE
IN ACCORDANCE WITH ASME Y14.5M & B46.1

SHOP ORDERS

ACCT NO.	NO. REQD	SER NO.	-
DEL TO		DATE ISSD	-
		DATE REQD	-
SURFACE TREATMT	-		
IDENT METHOD	TAG		
PROJECT NUMBER	N/A		
PROJECT NAME	FERMI LAB		
DWG BY	R LA MANTIA	DATE	07-Feb-02
CHK BY	Jon Zbasnik	DATE	21-Mar-02
APR BY	Jon Zbasnik	DATE	21-Mar-02

FERMI LAB (logo)

ERNEST ORLANDO LAWRENCE BERKELEY NATIONAL LABORATORY
UNIVERSITY OF CALIFORNIA - BERKELEY

LHC IR FEEDBOX
CRYOGENICS
FLANGE, FNAL# 5520-MB-390033

MICROFILMED:	DWG. TYPE	SHOWN ON	SCALE: 1/1	DO NOT SCALE PRINTS
	PART	-	SHEET 1 OF 1	

PATENT CLEAR:	DESIGN ACCT. NO.	CATEGORY CODE	DWG. NO.	SIZE	REV.
	Z5LCE2	LH2003	2513073		A

Dwg. File: 251307.Model File: 389033

DWG. NO. 2513073 SIZE A REV. SH. 1

Rev. 12/97 DPO

NAME: ARHARRIS OBJECT: 251307 DATE: 18-Aug-02 12:48:05