DWG. NO.	SIZE	REV.	SH.
25M8642	1	1	1

DESCRIPTION	MATERIAL	MAT. LOCATION
-	304L SS	-

NOTES: UNLESS OTHERWISE SPECIFIED,

1) POSITIONAL TOLERANCES AND DATUM FEATURES OF SIZE APPLY REGARDLESS OF FEATURE SIZE.

2) ANY VENDOR JOINT LOCATION AND PROCEDURES ARE SUBJECT TO LBNL APPROVAL.

3) SURFACES TO BE COATED AFTER FORMING WITH 0.0002 INCH ELECTRODEPOSITED Ni, EXCEPT FOR NOTED AREAS.

4) TIN NOTED AREAS THAT WITH 60/40 Sn/Pb SOLDER. USE ROSIN FLUX

5) PROTECT FINISHED PART BY BAGGING OR SIMILAR METHOD TO PROTECT AND MAINTAIN CLEANLINESS DURING SHIPMENT AND STORAGE.

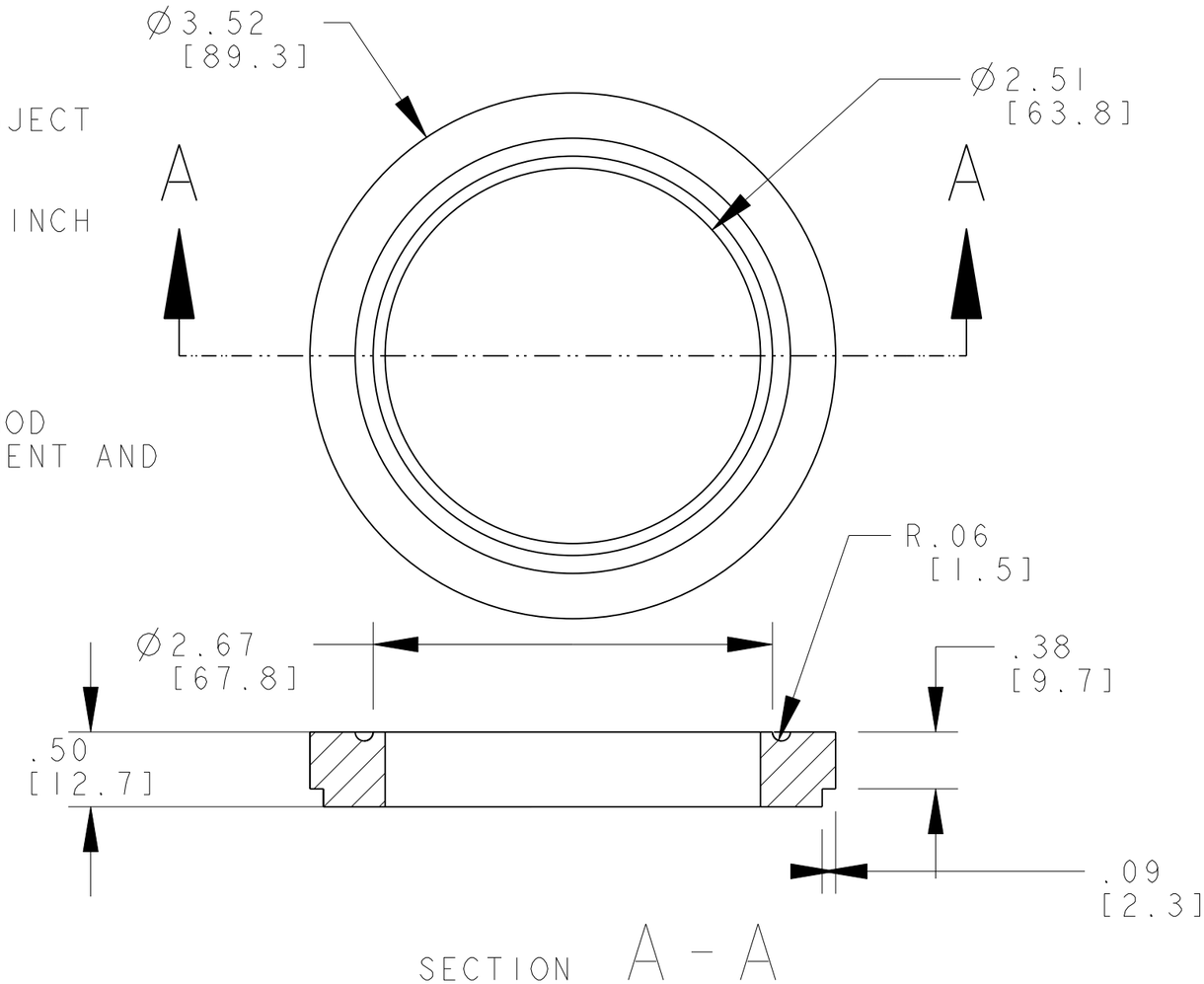

REV	DWG	CHK	ZONE	DATE	CHANGES

UNLESS OTHERWISE SPECIFIED

TOLERANCES		
	X.X ± 0.1	FRAC. ± 1/64
	X.XX ± 0.03	Angles ± 1.00°
	X.XXX ± 0.010	FINISH 125 √(µin)

DO NOT SCALE PRINT

THREADS ARE CLASS 2
CHAMFER ENDS OF ALL SCREW TREADS 30°
CUT ROUND, 1.5 THREAD RELIEF ON MACHINED THREADS
BREAK EDGES .016 MAX. ON MACHINED WORK
REMOVE BURRS, WELD SPLATTER & LOOSE SCALE
IN ACCORDANCE WITH ASME Y14.5M & B46.1

SHOP ORDERS

SER NO.	-		
ACCT NO.		NO. REQD	DATE ISSD -
DEL TO			DATE REQD -
SURFACE TREATMT	-		
IDENT METHOD	TAG		
PROJECT NUMBER	N/A		N/A (logo)
PROJECT NAME	N/A		
DWG BY	JON ZBASNIK		DATE 31-Jul-02
CHK BY	JON ZBASNIK		DATE
APR BY	JON ZBASNIK		DATE

ERNEST ORLANDO LAWRENCE BERKELEY NATIONAL LABORATORY
UNIVERSITY OF CALIFORNIA - BERKELEY

LHC IR FEEDBOX
CRYOGENICS
VENT SLEEVE CAP

MICROFILMED:	DWG. TYPE	SHOWN ON	SCALE: 1/1	DO NOT SCALE PRINT
	PART	251137	SHEET 1 OF 1	
PATENT CLEAR:	DESIGN ACCT. NO.	CATEGORY CODE	DWG. NO.	SIZE / REV.
	Z5LCE2	LH2003	25M8642	1

Dwg. File: 25M864 Model File: 25M8

NAME: DULIE OBJECT: 25M864 DATE: 03-Sep-02 08:04:32