DESCRIPTION	MATERIAL	MAT. LOCATION
6" DIAM. NOM. CONFLAT	MDC #110026 304SS	-

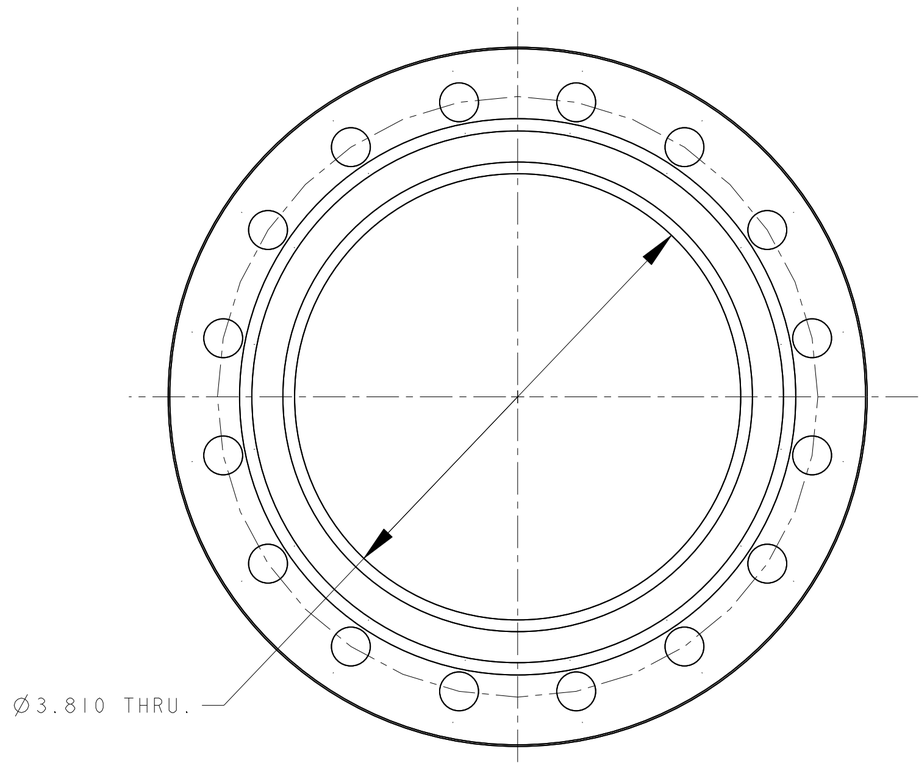

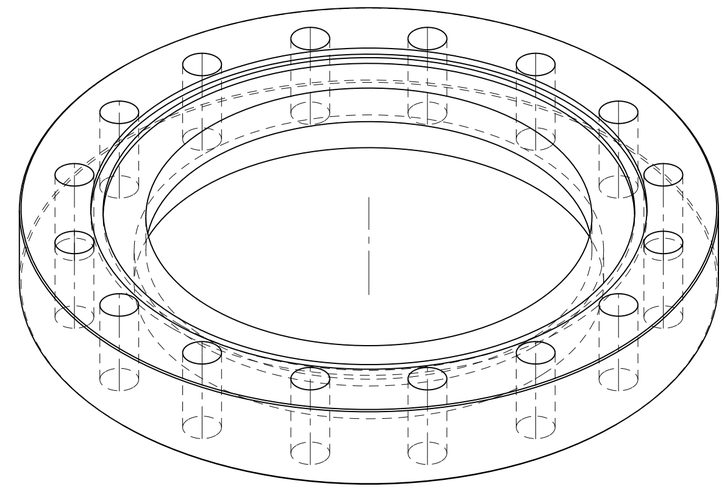

SCALE 1/1

NOTES: UNLESS OTHERWISE SPECIFIED,

1.) PURCHASE PART; DRAWING FOR REFERENCE ONLY.

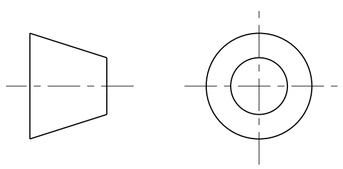

THIRD ANGLE PROJECTION

REV	DWG	CHK	ZONE	DATE	CHANGES

UNLESS OTHERWISE SPECIFIED

TOLERANCES		
	X.X ± 0.1	FRAC. ± 1/64
	X.XX ± 0.03	Angles ± 1.00°
	X.XXX ± 0.010	FINISH 125 (μin)

DO NOT SCALE PRINT

THREADS ARE CLASS 2
CHAMFER ENDS OF ALL SCREW TREADS 30°
CUT ROUND, 1.5 THREAD RELIEF ON MACHINED THREADS
BREAK EDGES .016 MAX. ON MACHINED WORK
REMOVE BURRS, WELD SPLATTER & LOOSE SCALE
IN ACCORDANCE WITH ASME Y14.5M & B46.1

SHOP ORDERS

ACCT NO.	NO. REQD	SER NO.	-
DEL TO		DATE ISSD	-
SURFACE TREATMT	-	DATE REQD	-
IDENT METHOD	TAG		
PROJECT NUMBER	N/A		
PROJECT NAME	N/A		
DWG BY	KNOLLS	DATE	31-May-01
CHK BY	Jon Zbasnik	DATE	
APR BY	Jon Zbasnik	DATE	

ERNEST ORLANDO LAWRENCE BERKELEY NATIONAL LABORATORY
UNIVERSITY OF CALIFORNIA - BERKELEY

LHC IR FEEDBOX
ELECTRICAL
TRANSDUCER, BUCKET FLANGE

MICROFILMED:	DWG. TYPE	SHOWN ON	SCALE: 1/1	DO NOT SCALE PRINTS
	PART	2518463	SHEET 1 OF 1	
PATENT CLEAR:	DESIGN ACCT. NO.	CATEGORY CODE	DWG. NO. SIZE	REV.
	Z5LCE2	LHC2004	2518443	A

DWG. NO. 2518443 SIZE A REV. SH. 1

Dwg. File: 251844 Model File: 2518443_TRNSDCR_BUCKET_FLANGE

Rev. 1/29/2000 J. R. Osborn

NAME:DULIE OBJECT:251844 DATE:30-Aug-02 01:30:37