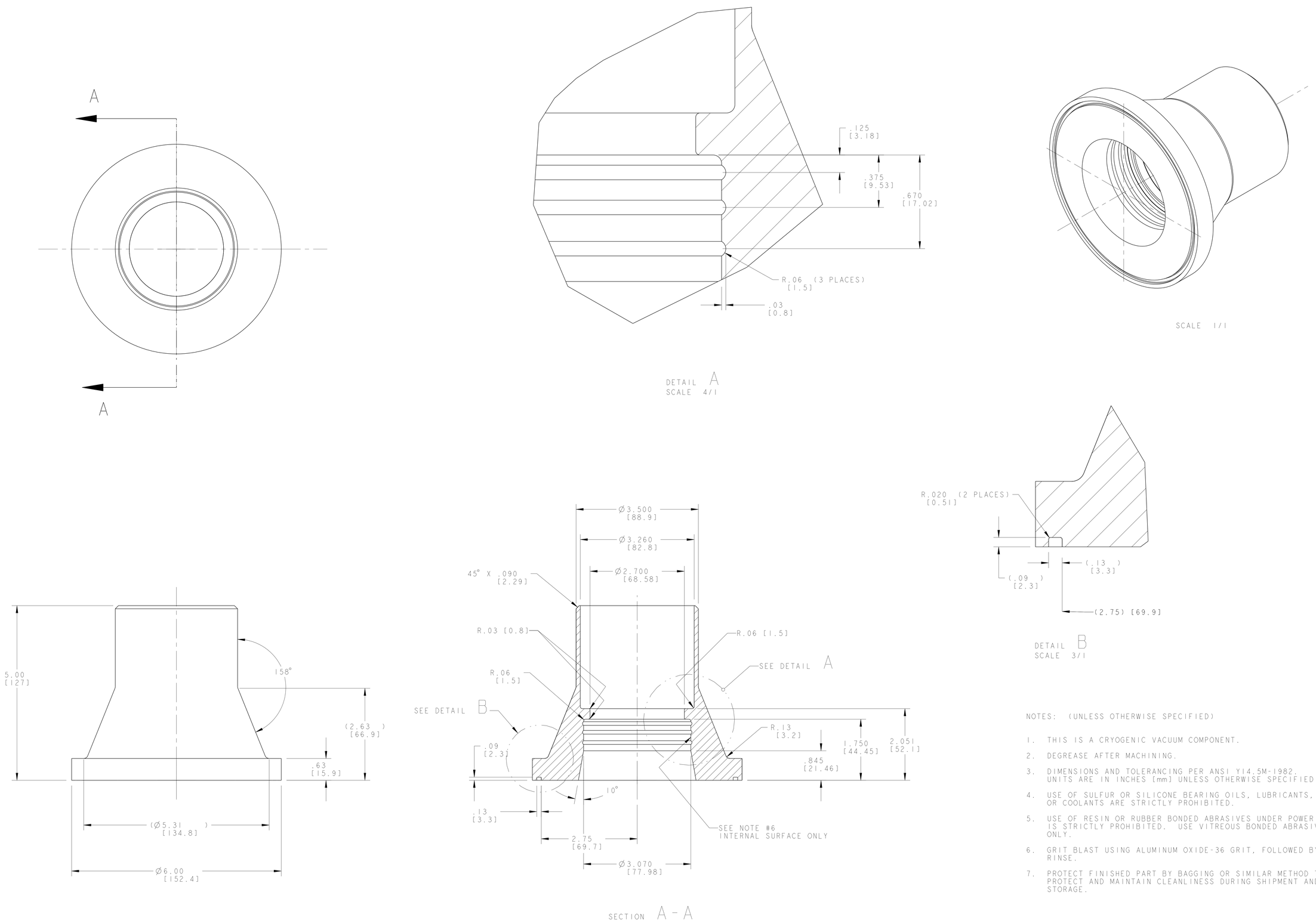

NOTES: (UNLESS OTHERWISE SPECIFIED)

1. THIS IS A CRYOGENIC VACUUM COMPONENT.
2. DEGREASE AFTER MACHINING.
3. DIMENSIONS AND TOLERANCING PER ANSI Y14.5M-1982. UNITS ARE IN INCHES [mm] UNLESS OTHERWISE SPECIFIED.
4. USE OF SULFUR OR SILICONE BEARING OILS, LUBRICANTS, OR COOLANTS ARE STRICTLY PROHIBITED.
5. USE OF RESIN OR RUBBER BONDED ABRASIVES UNDER POWER IS STRICTLY PROHIBITED. USE VITREOUS BONDED ABRASIVES ONLY.
6. GRIT BLAST USING ALUMINUM OXIDE-36 GRIT, FOLLOWED BY ALCHOHOL RINSE.
7. PROTECT FINISHED PART BY BAGGING OR SIMILAR METHOD TO PROTECT AND MAINTAIN CLEANLINESS DURING SHIPMENT AND STORAGE.

THIRD ANGLE PROJECTION

DESCRIPTION	MATERIAL	MAT. LOCATION
3" PIPE, LONG WELD NECK FLANGE PER ASTM A182	SS 304L	-

REV	DWG	CHK	ZONE	DATE	CHANGES

UNLESS OTHERWISE SPECIFIED
TOLERANCES: X.X ± 0.1 FRAC. ± 1/64; X.XX ± 0.03 Angles ± 1.00°; X.XXX ± 0.010 FINISH 125/1000
DO NOT SCALE PRINT
THREADS ARE CLASS 2
CHAMFER ENDS OF ALL SCREW THREADS 30°
CUT ROUND, 1.5 THREAD RELIEF ON MACHINED THREADS
BREAK EDGES .016 MAX. ON MACHINED WORK
REMOVE BURRS, WELD SPLATTER & LOOSE SCALE
IN ACCORDANCE WITH ASME Y14.5M & B46.1

SHOP ORDERS
SER NO. -
ACCT NO. / NO. REQD / DATE ISSD -
DEL TO / DATE REQD -
SURFACE TREATMT -
IDENT METHOD TAG
PROJECT NUMBER N/A
PROJECT NAME N/A
DWG BY KNOLLS DATE 20-Aug-02
CHK BY ZBASNIK, OSHATZ DATE 31-JUL-02
APR BY ZBASNIK, OSHATZ DATE 31-JUL-02

ERNEST ORLANDO LAWRENCE BERKELEY NATIONAL LABORATORY
UNIVERSITY OF CALIFORNIA - BERKELEY
LHC IR FEEDBOX
CRYOGENICS
LAMBDA PLUG, WELD NECK FLANGE

MICROFILMED: | DWG. TYPE PART | SHOWN ON - | SCALE: 1/1 | DO NOT SCALE PRINTS
PATENT CLEAR: | DESIGN ACCT. NO. Z5LCE2 | CATEGORY CODE LH2003 | SHEET 1 OF 1 | DWG. NO. 25I4486 | SIZE A | REV. A

DWG. NO. 25I4486 | SIZE A | REV. A | SH. 1

NAME:DULIE OBJECT:25I448 DATE:30-Aug-02 01:26:18