DWG. NO.	SIZE	REV.	SH.
2511664	A		1

ITEM	PART NO	REQD	DESCRIPTION	MATERIAL
4		4	LEVELING FEET STUD	SS
3	251362	1	THRUST LOAD BUMPER, WEB	304L STAINLESS
2	251361	1	THRUST LOAD BUMPER BRACKET	304L STAINLESS
1		4	1"-8UNC JAM NUT	-

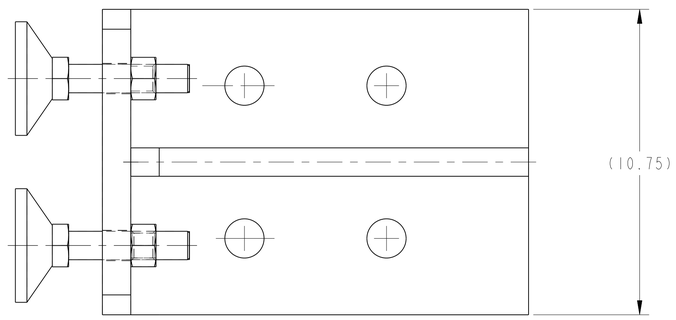

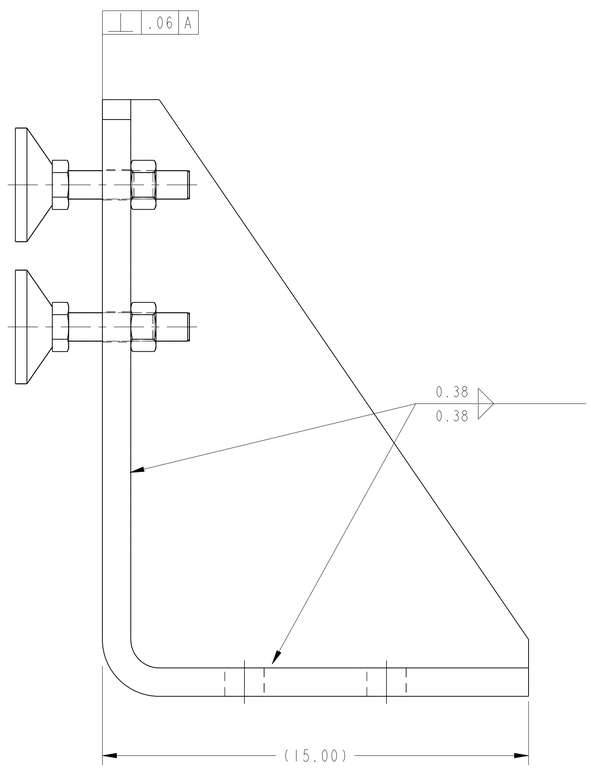

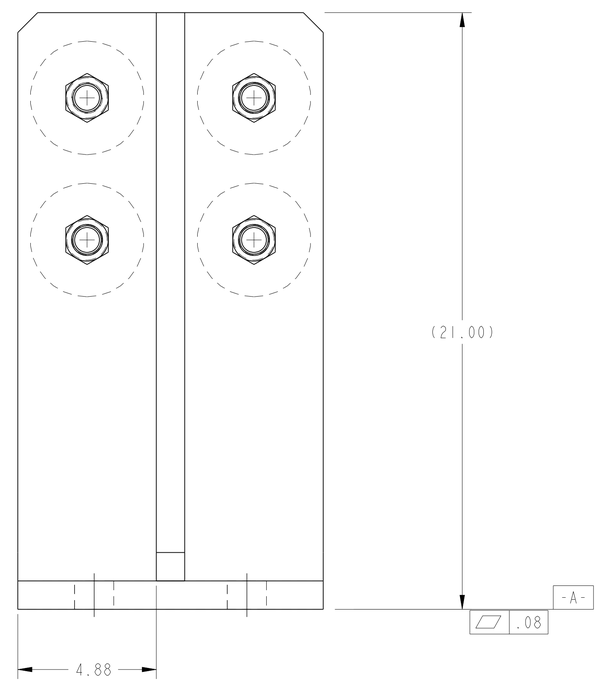

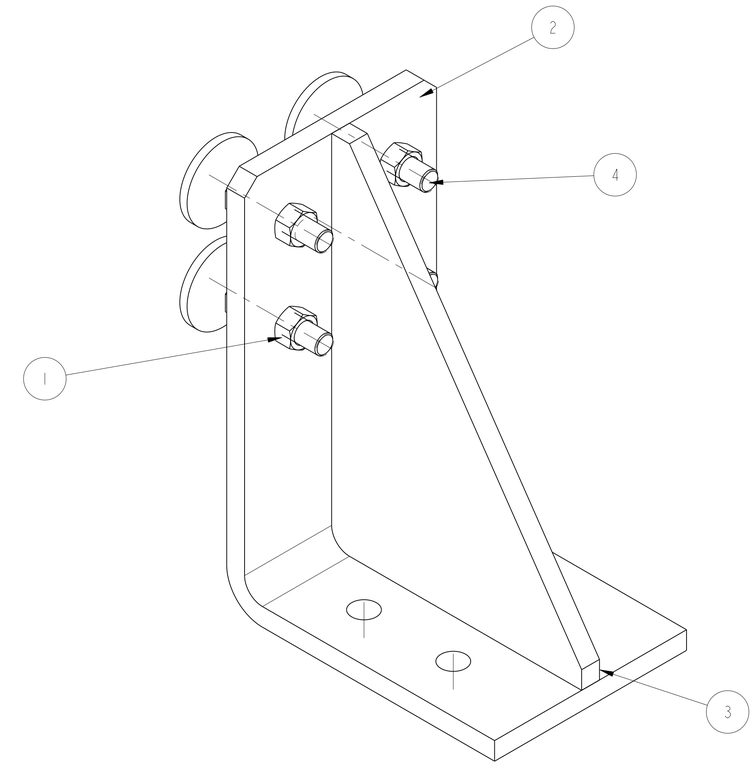

NOTES: UNLESS OTHERWISE SPECIFIED,

1 POSITIONAL TOLERANCES AND DATUM FEATURES OF SIZE APPLY REGARDLESS OF FEATURE SIZE.

2 CLEARANCE HOLE FOR HILTI HSL-RM24/30 METRIC EXPANSION ANCHOR.

3 PROTECT FINISHED PART BY BAGGING OR SIMILAR METHOD PROTECT AND MAINTAIN CLEANLINESS DURING SHIPMENT AND STORAGE.

4. ESTIMATED WEIGHT = 10 LBS

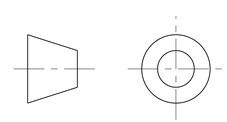

THIRD ANGLE PROJECTION

REV	DWG	CHK	ZONE	DATE	CHANGES

UNLESS OTHERWISE SPECIFIED

TOLERANCES		
	X.X ± 0.1	FRAC. ± 1/64
	X.XX ± 0.03	Angles ± 1.00°
	X.XXX ± 0.010	FINISH 125 √ (µin)

DO NOT SCALE PRINT

THREADS ARE CLASS 2
CHAMFER ENDS OF ALL SCREW TREADS 30°
CUT ROUND, 1.5 THREAD RELIEF ON MACHINED THREADS
BREAK EDGES .016 MAX. ON MACHINED WORK
REMOVE BURRS, WELD SPLATTER & LOOSE SCALE
IN ACCORDANCE WITH ASME Y14.5M & B46.1

SHOP ORDERS

ACCT NO.	NO. REQD	SER NO	-
DEL TO		DATE ISSD	-
SURFACE TREATMT	-	DATE REQD	-
IDENT METHOD	TAG		
PROJECT NUMBER	N/A		
PROJECT NAME	N/A		
DWG BY	KNOLLS	DATE	19-Jul-02
CHK BY	Jon Zbasnik	DATE	
APR BY	Jon Zbasnik	DATE	

N/A (Stage)

ERNEST ORLANDO LAWRENCE BERKELEY NATIONAL LABORATORY
UNIVERSITY OF CALIFORNIA - BERKELEY

LHC IR FEEDBOX
MAJOR ASSEMBLY
THRUST LOAD BUMPER WELDMENT

MICROFILMED:	DWG. TYPE	SHOWN ON	SCALE: 0.250	DO NOT SCALE PRINTS
	ASSEM		SHEET 1 OF 1	
PATENT CLEAR:	DESIGN ACCT. NO.	CATEGORY CODE	DWG. NO.	SIZE / REV.
	Z5LCE2	LH2001	2511664	A

NAME:DULIE OBJECT:251166 DATE:30-Aug-02 01:09:40