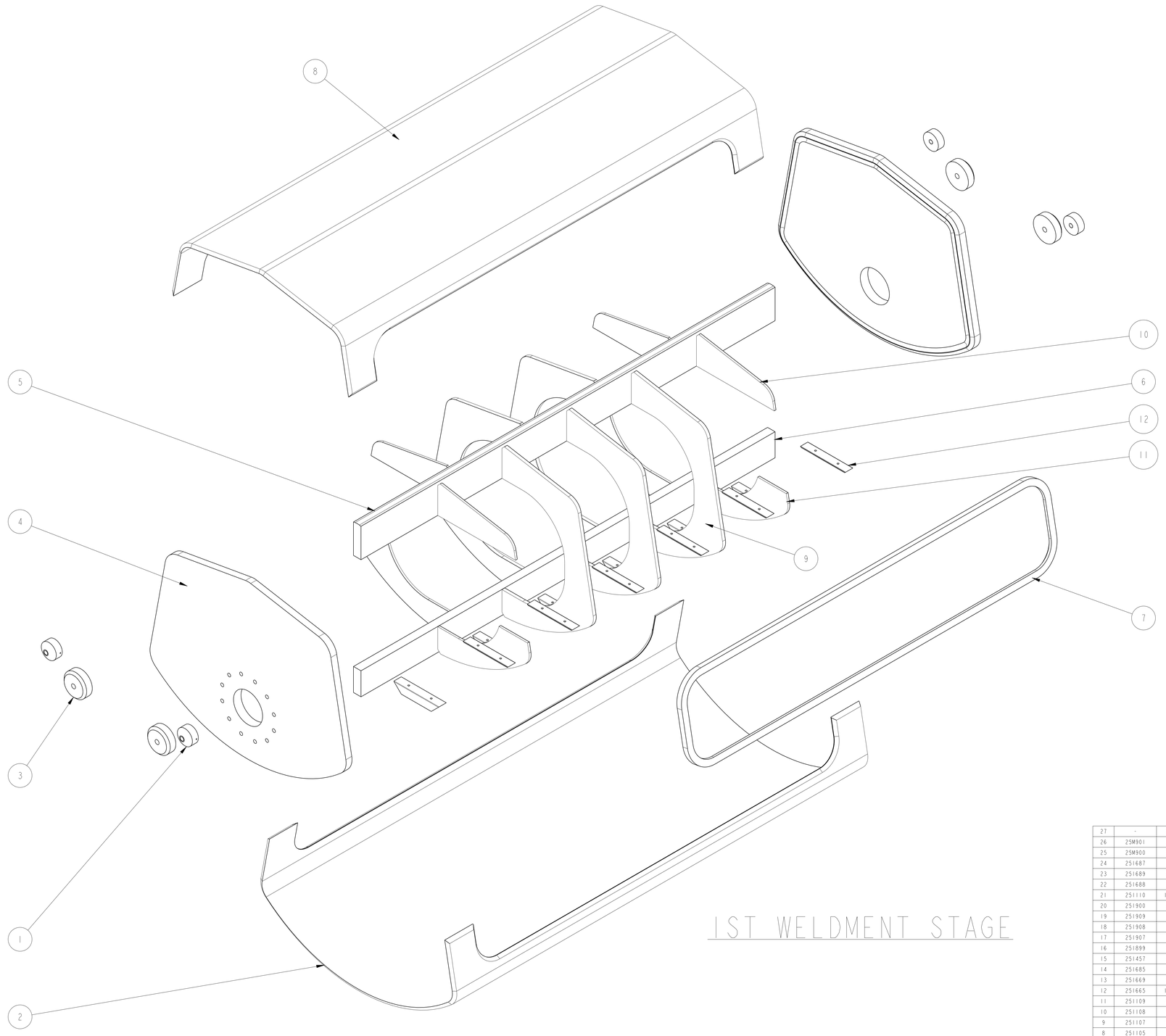

1ST WELDMENT STAGE

NOTES: UNLESS OTHERWISE SPECIFIED,

1. DIMENSIONS AND TOLERANCING PER ANSI Y14.5M-1982 UNITS ARE IN INCHES UNLESS OTHERWISE SPECIFIED.
2. USE OF SULFUR OR SILICONE BEARING OILS, LUBRICANTS, OR COOLANTS ARE STRICTLY PROHIBITED
3. USE OF RESIN OR RUBBER BONDED ADRASIVES UNDER POWER IS STRICTLY PROHIBITED. USE VITREOUS BONDED ABRASIVES ONLY.
4. CLEAN AFTER MACHINING PER VENDOR SPECIFICATION; SUBJECT TO LBNL APPROVAL.
5. VENDOR SUGGESTED CHANGES TO WELD PREPS; SUBJECT TO LBNL APPROVAL.
6. PROTECT FINISHED PART BY BAGGING OR SIMILAR METHOD TO PROTECT AND MAINTAIN CLEANLINESS DURING SHIPMENT AND STORAGE.
7. VENDOR SUGGESTED CHANGES TO TOLERANCES TO FACILITATE ASSEMBLY; SUBJECT TO LBNL APPROVAL
8. OPERATING CONDITIONS, 4.2k, 70 psig (4.4bar) TEST PRESSURE.
9. ESTIMATED WEIGHT: 768 LBS.

ITEM	PART NO	REQD	DESCRIPTION	MATERIAL
27	-	2	STANDARD BRAIDED COPPER STRAP	OFC COPPER BRAID
26	25M901	2	CLAMP COVER	CDA 101
25	25M900	2	CLAMP BASE PLATE	CDA 101
24	251687	1	Cable Loom Base-B Assembly	-
23	251689	3	Cable loom Base-A Assembly	-
22	251688	2	Cable Loom Base Assembly	-
21	251110	10	LIQUID HELIUM TANK, WELDMENT RING	TP 304L SS
20	251900	2	TANK SUPPORT BRACKET	304L SS
19	251909	1	LIQUID HELIUM PORT STUB	304L SS
18	251908	1	CHECK VALVE STUB	304L SS
17	251907	1	RELIEF PORT PIPE STUB	304L SS
16	251899	2	PIPING SUPPORT PAD	304L SS
15	251457	2	HTS Solder Joint Assembly-8a	-
14	251685	2	HTS Solder Joint Assembly-10	-
13	251669	2	HTS Solder Joint Assembly-8	-
12	251665	12	Solder Box Gusset	Stainless Steel
11	251109	4	LIQUID HELIUM TANK, HALF RIB, LOWER	304L SS
10	251108	4	LIQUID HELIUM TANK , UPPER HALF RIB	304L SS
9	251107	5	LIQUID HELIUM TANK, FULL RIB	304L SS
8	251105	1	LIQUID HELIUM TANK, UPPER SHELL	304L SS
7	251104	1	LIQUID HELIUM TANK, PORT FRAME	304L SS
6	251103	1	LIQUID HELIUM TANK, HORIZONTAL LOWER RIB	304L SS
5	251102	1	LIQUID HELIUM TANK, , HORIZONTAL UPPER RIB	304L SS
4	251115	2	LIQUID HELIUM TANK, END PLATE (1 PORT)	304L SS
3	251898	4	LIFTING PAD	304L SS
2	251106	1	LIQUID HELIUM TANK, LOWER SHELL,	304L SS
1	25M860	4	Tank Support Boss	304L SS

REV	DWG	CHK	ZONE	DATE	CHANGES
A	RFL	SPV		8-26-02	GENERAL PRESSURE VESSEL COMPLIANCE CHANGES

THIRD ANGLE PROJECTION

UNLESS OTHERWISE SPECIFIED
TOLERANCES: X.X ± 0.1 FRAC. ± 1/64; X.XX ± 0.03 Angles ± 1.00°; X.XXX ± 0.010 FINISH 125 μ (μ inch)
DO NOT SCALE PRINT
THREADS ARE CLASS 2
CHAMFER ENDS OF ALL SCREW THREADS 30°
CUT ROUND, 1.5 THREAD RELIEF ON MACHINED THREADS
BREAK EDGES .016 MAX. ON MACHINED WORK
REMOVE BURRS, WELD SPLATTER & LOOSE SCALE
IN ACCORDANCE WITH ASME Y14.5M & B46.1

SHOP ORDERS
ACCT NO. / MC. REQD
MEL TO / DATE ISSD / DATE REQD
SURFACE TREATMT. / IDENT METHOD TAG
PROJECT NUMBER N/A
PROJECT NAME N/A
DWG KNOLLS DR. / DATE 18-Jan-02
CHK Jon Zbasnik DR. / DATE
APR Jon Zbasnik DR. / DATE
SEM NO. / DATE ISSD / DATE REQD

ERNEST ORLANDO LAWRENCE BERKELEY NATIONAL LABORATORY
UNIVERSITY OF CALIFORNIA - BERKELEY

LHC IR FEEDBOX
CRYOGENICS
LIQUID HELIUM TANK - 10 PORT

MICROFILMED: / DWG. TYPE ASSEM / SHOWN ON / SCALE: 1/4 / SHEET 1 OF 4
PATENT CLEAR: / DESIGN ACCT. NO. 75LCE2 / CATEGORY CODE LH2003 / DWG. NO. 25I1116 / SIZE A / REV. A
DO NOT SCALE PRINTS

25I1116 A 1

NAME:DULIE OBJECT:25I1111_1 DATE:30-Aug-02 01:04:29

1ST WELDMENT STAGE

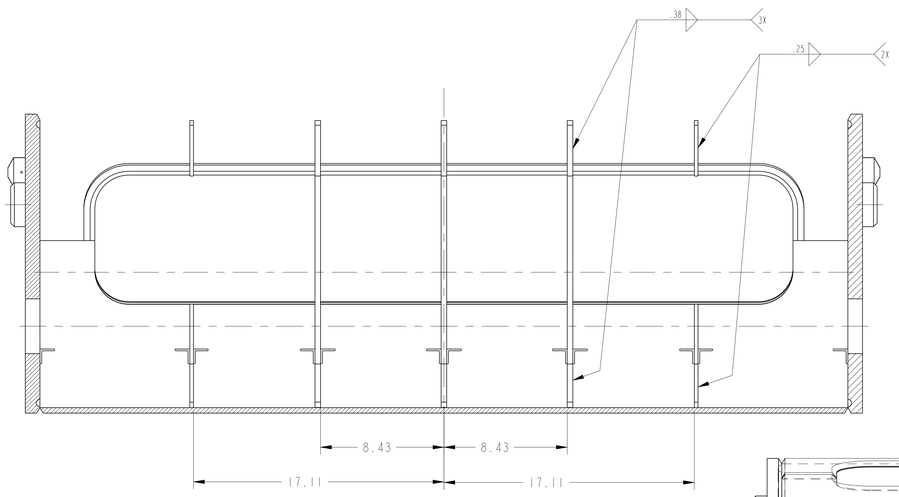

SECTION C-C
SCALE 1/4
VIEW ROTATED 180°

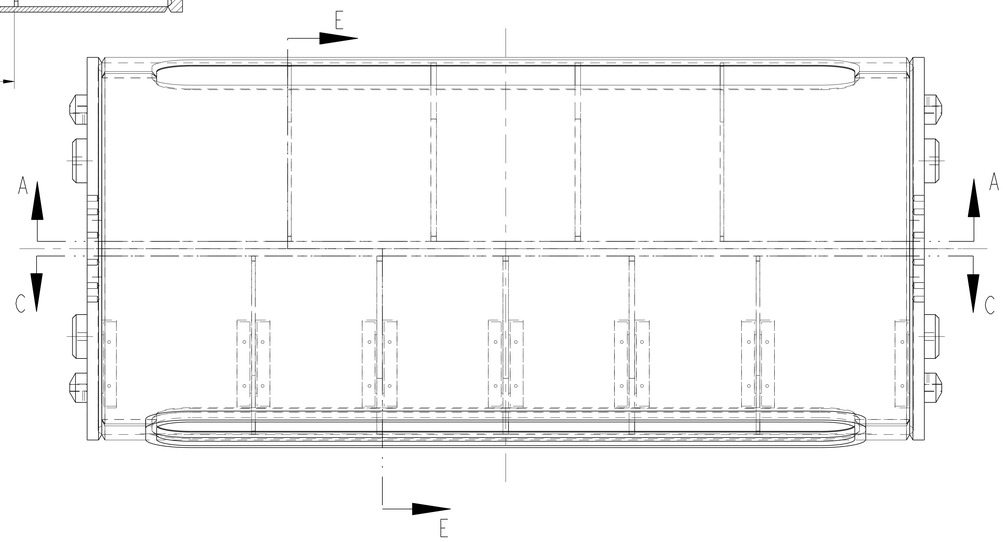

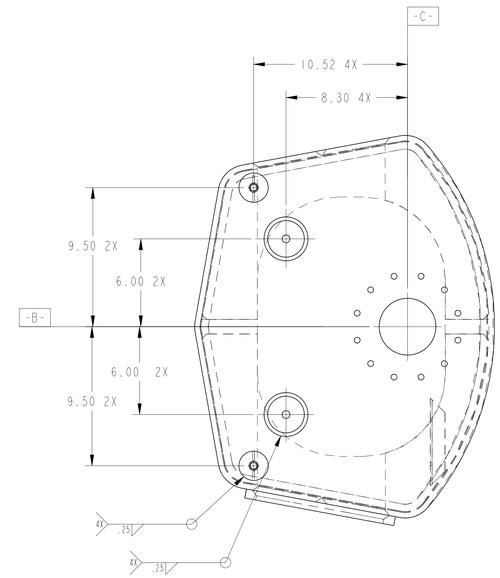

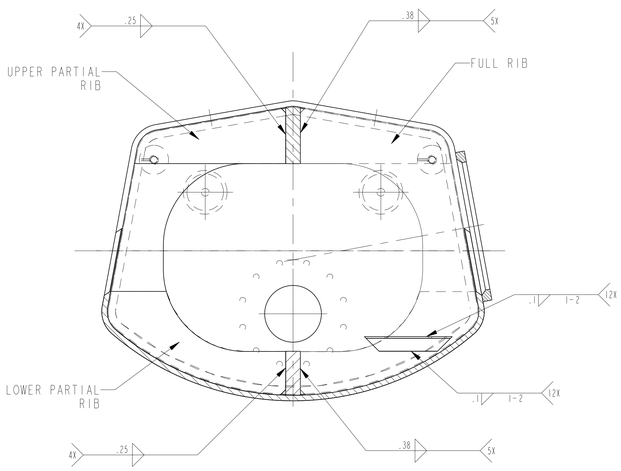

SECTION E-E

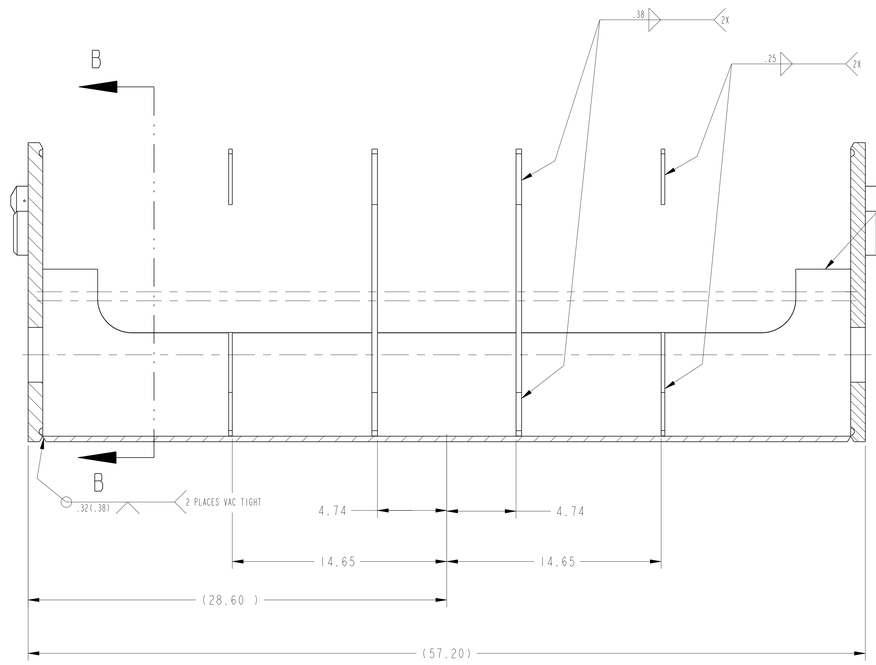

SECTION A-A

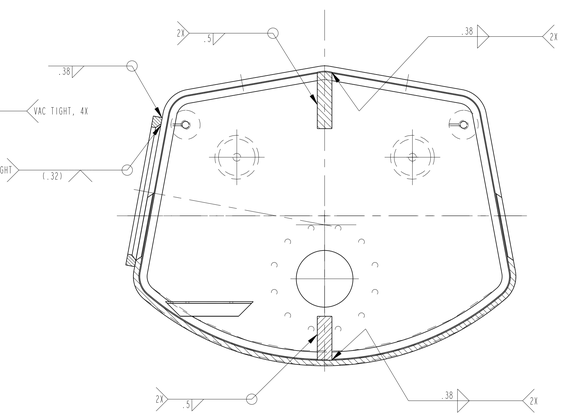

SECTION B-B

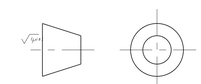

THIRD ANGLE PROJECTION

ERNEST ORLANDO LAWRENCE
BERKELEY NATIONAL LABORATORY
UNIVERSITY OF CALIFORNIA - BERKELEY

LHC IR FEEDBOX
CRYOGENICS
LIQUID HELIUM TANK - 10 PORT

MICROFILMED:	DWG. TYPE ASSEM	SHOWN ON	SCALE: 1/4	DO NOT SCALE PRINTS
			SHEET 2 OF 4	
PATENT CLEAR:	DESIGN ACCT. NO. Z5LCE2	CATEGORY CODE LH2003	DWG. NO. 2511116	SIZE A REV.

DWG. NO. 2511116 SIZE A REV. 2

NAME:DULIE OBJECT:2511111.2 DATE:30-Aug-02 01:04:30

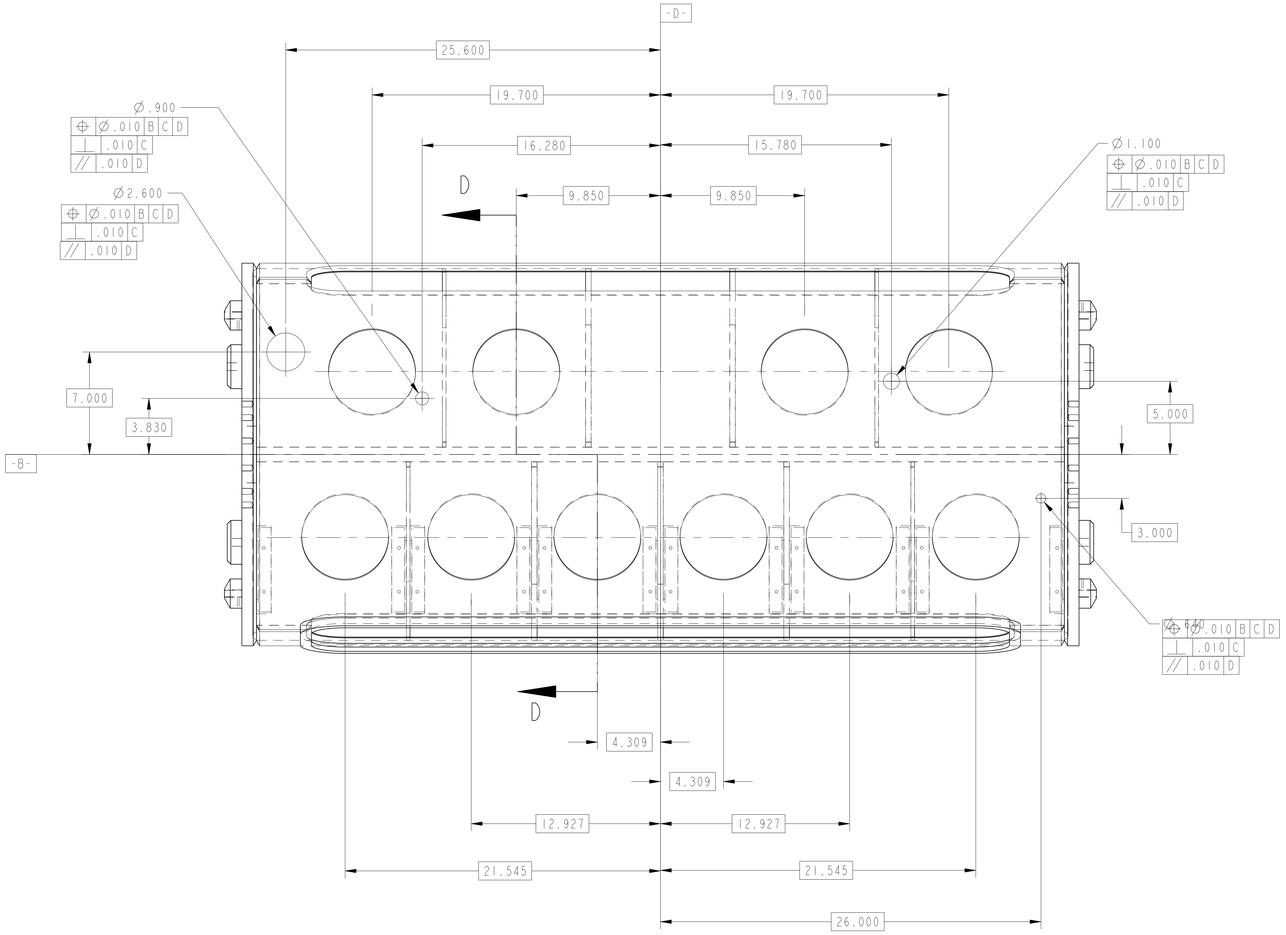

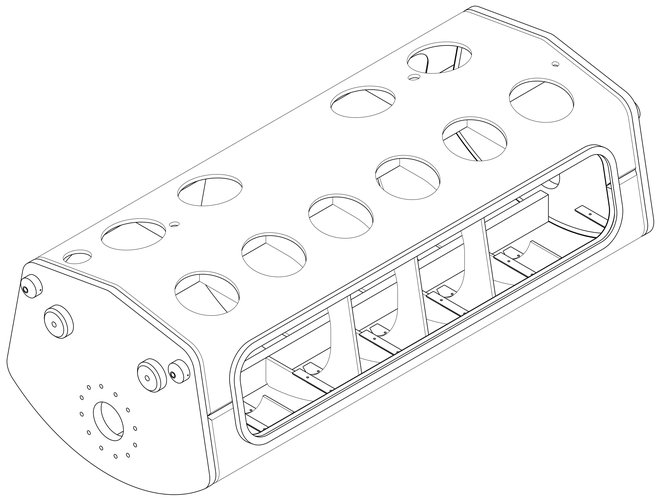

MACHINED STAGE

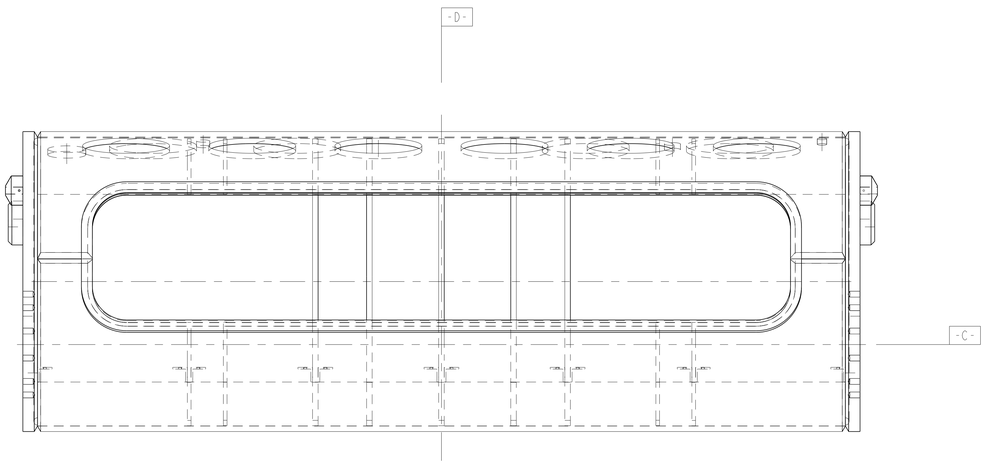

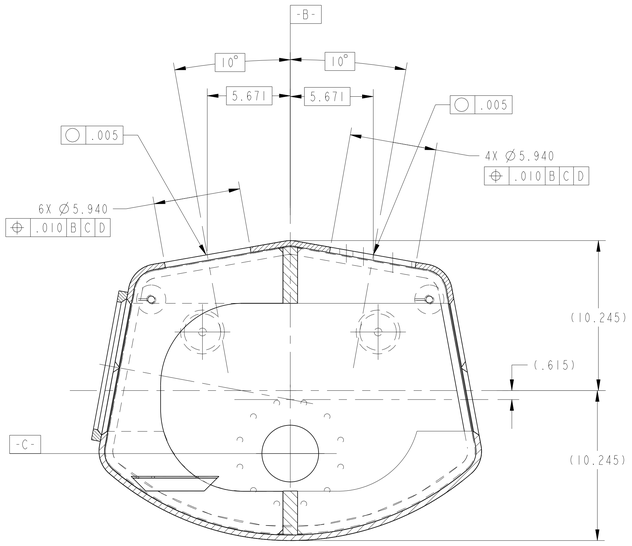

SECTION D-D

THIRD ANGLE PROJECTION

ERNEST ORLANDO LAWRENCE
BERKELEY NATIONAL LABORATORY
UNIVERSITY OF CALIFORNIA - BERKELEY

LHC IR FEEDBOX
CRYOGENICS
LIQUID HELIUM TANK - 10 PORT

MICROFILMED:	DWG. TYPE ASSEM.	SHOWN ON	SCALE: 1/4	DO NOT SCALE PRINTS
			SHEET 3 OF 4	
PATENT CLEAR:	DESIGN ACCT. NO. 25LCE2	CATEGORY CODE LH2003	DWG. NO. 2511116	SIZE A / REV.

2511116 A 3

NAME:DULIE OBJECT:2511111.3 DATE:30-Aug-02 01:04:31

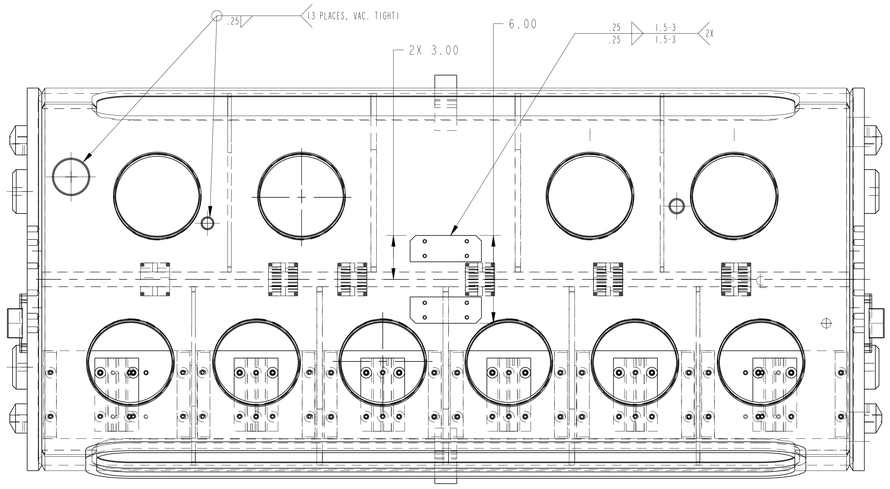

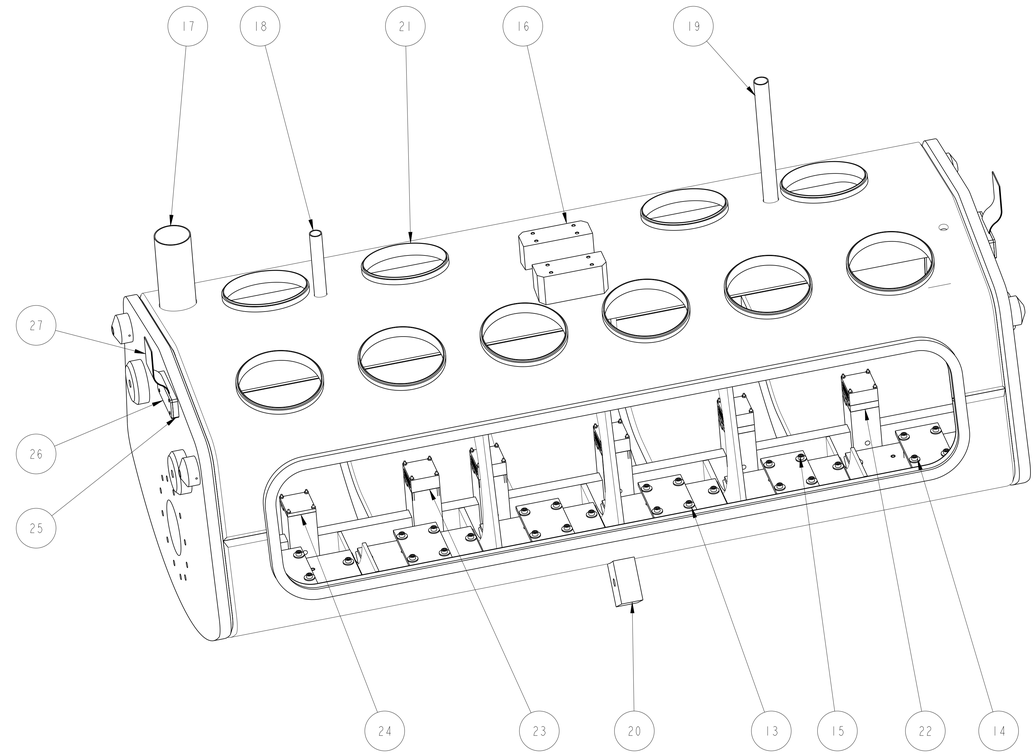

FINAL WELDMENT & ASSEMBLY STAGE

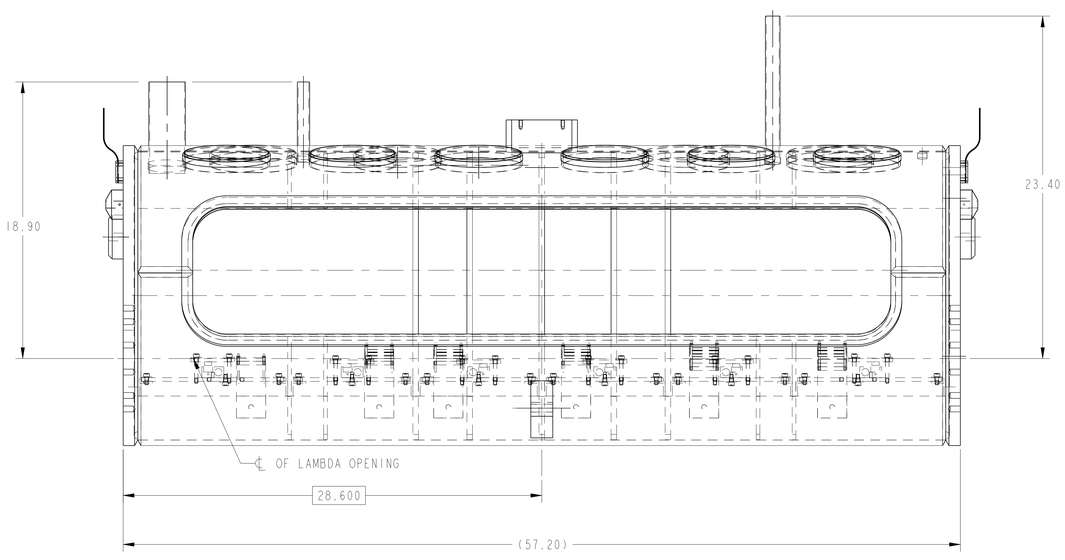

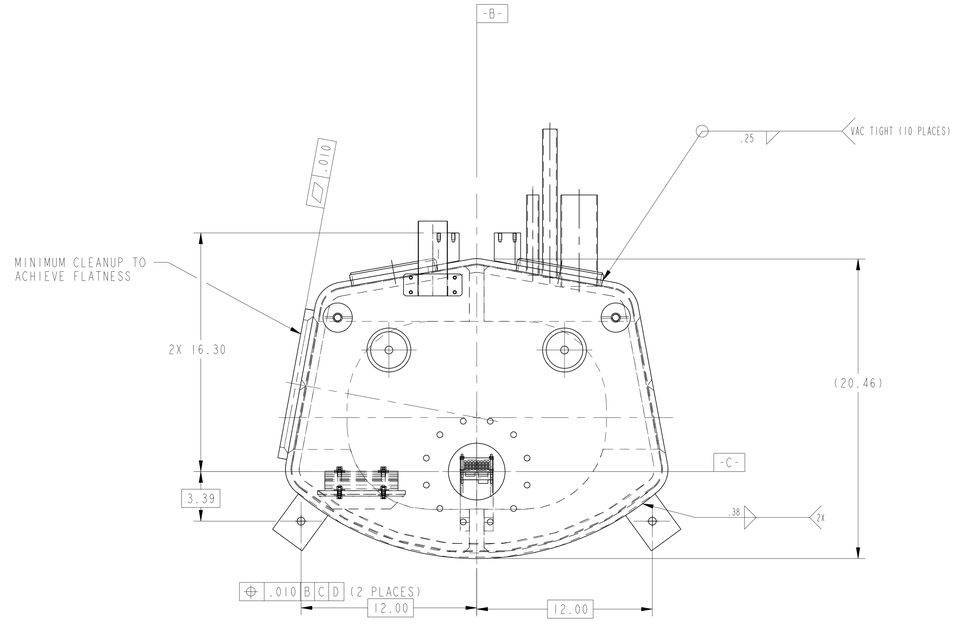

THIRD ANGLE PROJECTION

ERNEST ORLANDO LAWRENCE
BERKELEY NATIONAL LABORATORY
UNIVERSITY OF CALIFORNIA - BERKELEY

LHC IR FEEDBOX
CRYOGENICS
LIQUID HELIUM TANK - 10 PORT

MICROFILMED:	DWG. TYPE ASSEM	SHOWN ON	SCALE: 1/4	DO NOT SCALE PRINTS
			SHEET 4 OF 4	
PATENT CLEAR:	DESIGN ACCT. NO. Z5LCE2	CATEGORY CODE LH2003	DWG. NO. 251I116	SIZE A / REV.

DWG. NO. 251I116 SIZE A REV. 4

NAME:DULIE OBJECT:251I11_4 DATE:30-Aug-02 01:04:33