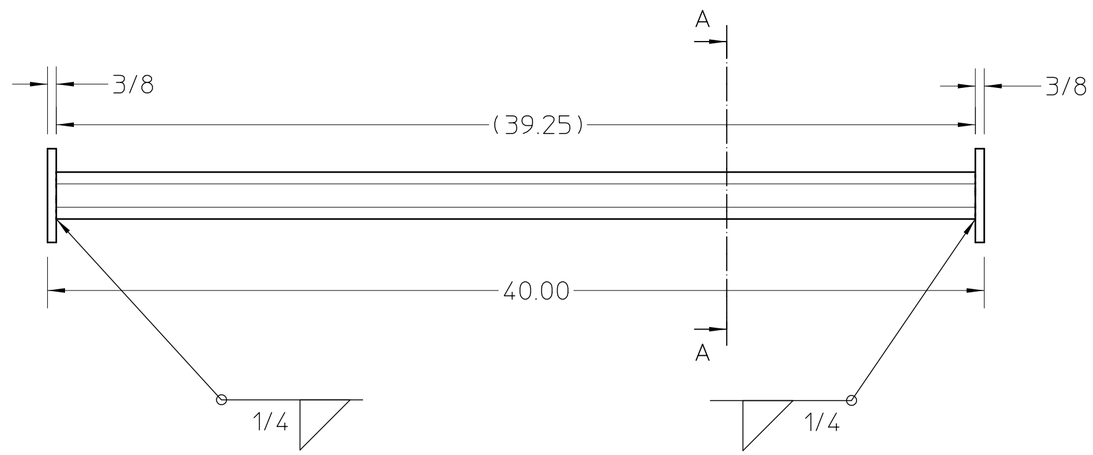

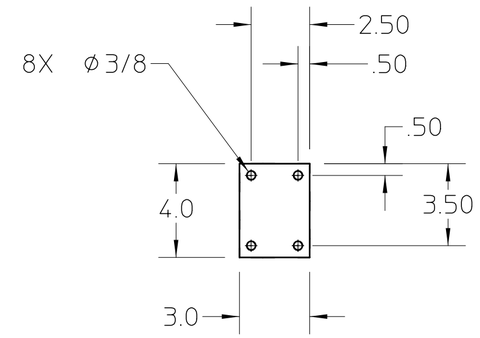

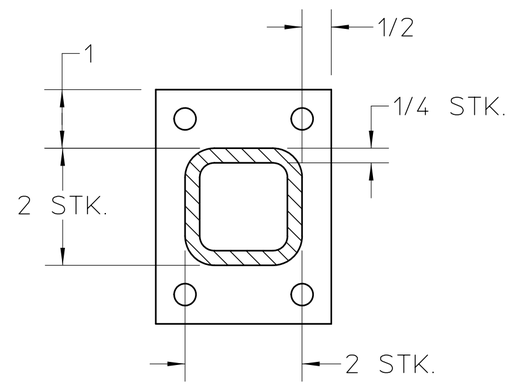

SECTION A-A
SCALE 1:2

26A3683A

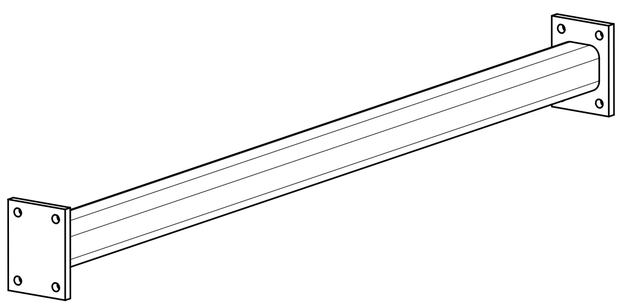

NOTES: (UNLESS OTHERWISE NOTED)

1. ALL DIMENSIONS ARE IN INCHES
2. MATERIAL: STEEL
3. ONE ASSEMBLY REQUIRED

MAT 2: ,	NOTES:
MAT 1: ,	NOTES:

REV	ZONE	CHANGES	DWG BY	DATE	CHK BY	DATE	APP BY	DATE

UNLESS OTHERWISE SPECIFIED

TOLERANCES			
	.X ± .030	FRAC. ± -	
	.XX ± .010	ANGLES ±1°	
	.XXX ± .005	FINISH 125√	

THREADS ARE CLASS 2
CHAMFER ENDS OF ALL SCREW THREADS 30°.
CUT 1.5 PITCH THRD RELIEF WITH ROUND NOSE TOOL ON MACHINE CUT THREADS.
BREAK EDGES .016 MAX. ON MACHINED WORK
REMOVE BURRS WELD SPLATTER & LOOSE SCALE
REFERENCES: ANSI Y14.5 & B46.1.

SHOP ORDERS

ACCT. NO.		SERIAL NO.	
DATE ISSD.	DATE REQD.	NO. REQD.	1
DELIVER TO		IDENT METH.	SEE NOTES
SURFACE TREATMENT			
DWG. BY	ajdemell	DATE	11-05-2002
CHK. BY	kelez	DATE	11-07-2002
APP. BY	kelez	DATE	11-07-2002

LAWRENCE BERKELEY LABORATORY
UNIVERSITY OF CALIFORNIA-BERKELEY

LIGHT SOURCE - BEND MAGNET BEAMLINES

BL 12.3.1 END STATION

TEMPORARY FRAME BRACE, FRONT

PATENT CLEAR	DWG. TYPE	SHOWN ON	SCALE 1:5	DO NOT SCALE PRINTS
MICROFILMED	DESIGN ACCT. NO. -	CATEGORY CODE AL6193	DWG. NO. 26A3683	SIZE A	REV.

SHEET 1 OF 1

AUTO GENERATED PDF – Nov 07 2002 15:26:09 PST