Wang NMR

FABRICATION/ASSEMBLY FLOOR TRAVELER

Date : _____

(1) Related Project : MICE

(2) Related Drawings : MICE-3200, MICE-3300

Receiving Material / Subassembly From : _____,

Date : _____

(3) Material Certification/ Safety Data/ QC

304S.S.

(4) Wang NMR QC

Dia. = 1362 mm , **L =** _____, **Thk =** 19 mm

Check with Acceptance Spec. or P. O. Spec. and Approve to use

_____.**(Sign) Date** _____

(5) Next Step Drawing : MICE-0000B

Assign to : _____

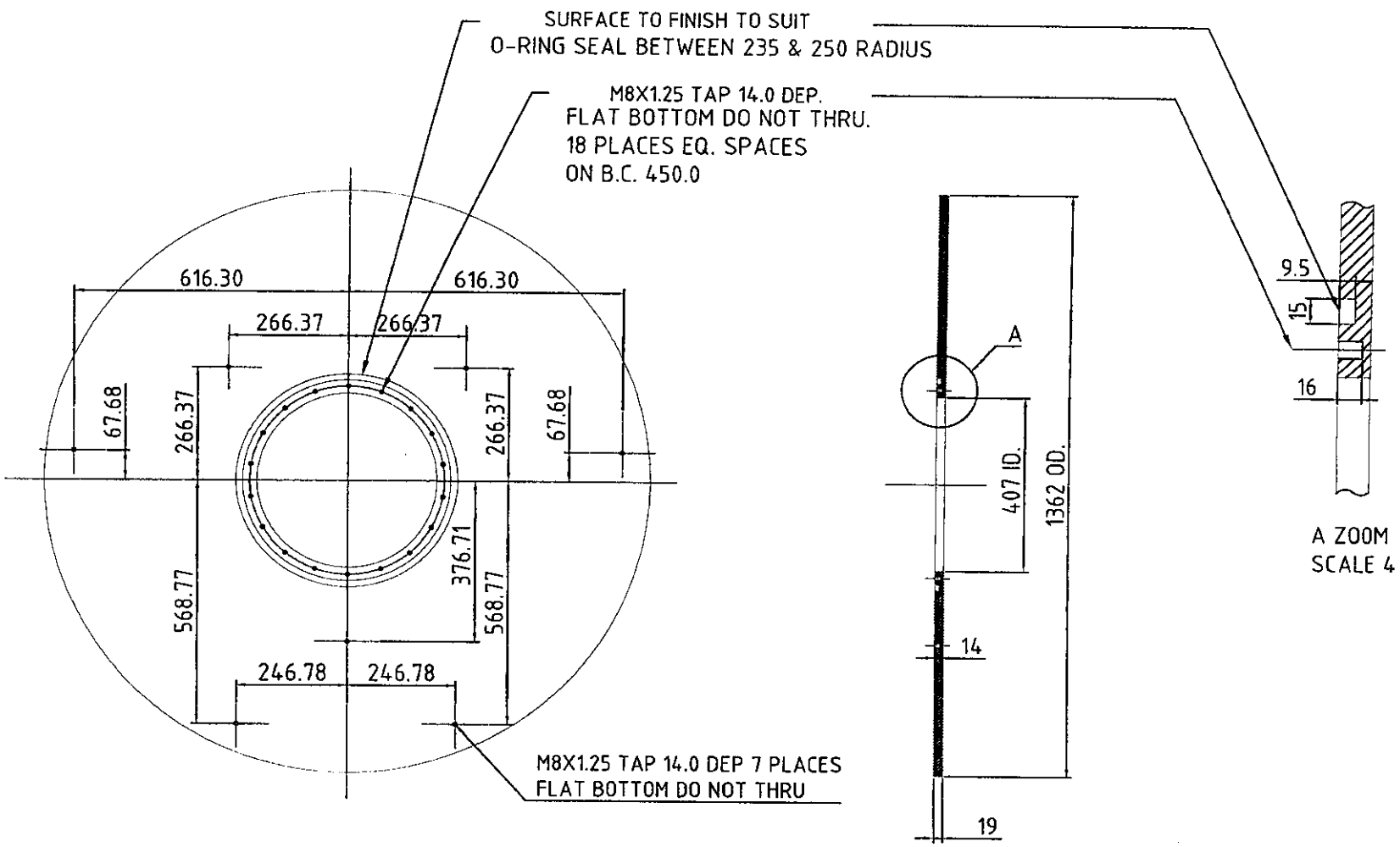

SCOPE OF WORK:
(1) WE SUPPLY 3/4" THICK PLATE WITH
ID=407-3mm OD=1362+3mm TO MACHINE
ID=407iÀ0.2mm OD=1362iÀ0.2mm
(2) MACHINE ORING GROOVP + TAP M8x1.25
(3) TAP M8 HOLE AS SHOW, DEPTH=14mm

NOTES:
1) DIMENSIONS ARE IN mm
2) MATERIAL IS 3/4" THK. 304 S.S. PLATE
3) QTY. 2

ALL DIMENSIONS ARE IN mm
TOLERANCES: DECIMALS XXX=±.005 XX=±.01 X=±.1
ANGLES ±.5°
CONCENTRICITY ±.1 TOTAL INDICATION RUN OUT
PERPENDICULAR ±.05 (UNLESS OTHERWISE SPECIFIED)

THIRD ANGLE PROJECTION

WANG NMR INC
550 N CANYONS PARKWAY, LIVERMORE, CA 94550

NAME: FRONT END PLATE			
DWG #: MICE - 3200		SHT 1 OF 1	
MATERIAL: 304 STAINLESS STEEL		QTY	2
DWN BY: XU	DATE: NOV 15,2007	SCALE: TO FIT	DWG SIZE:
1ST CHK:	DATE:	2ND CHK:	DATE:

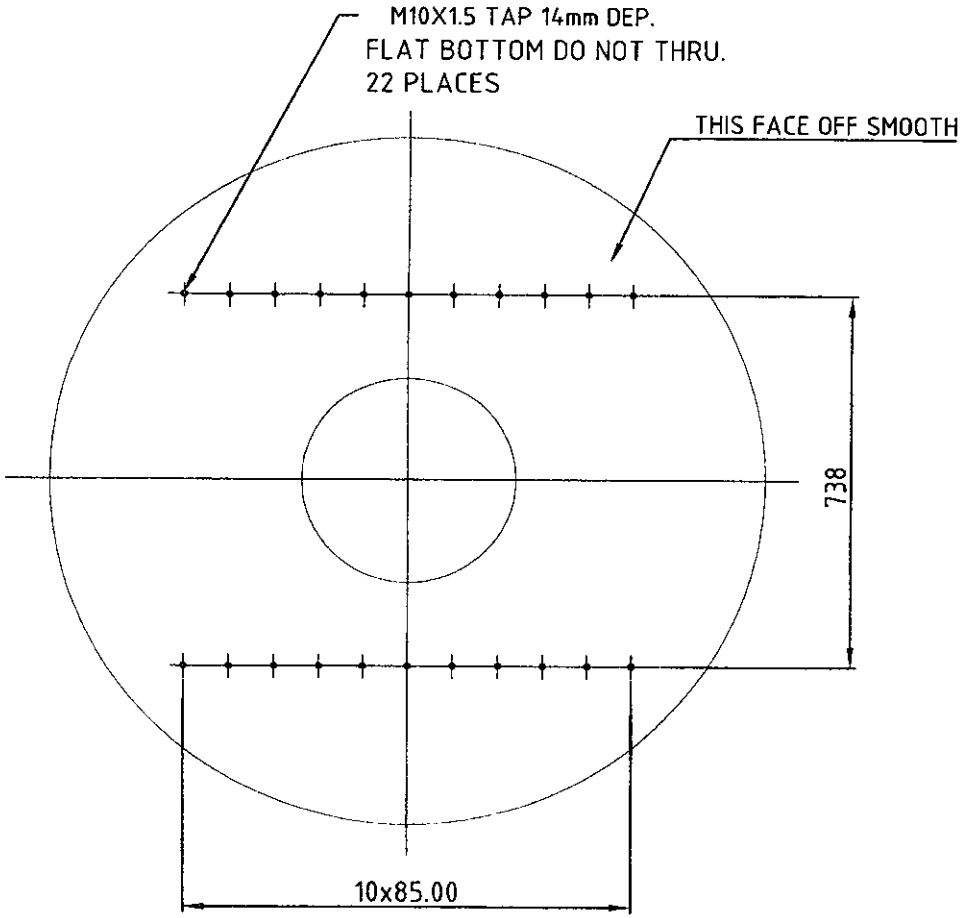

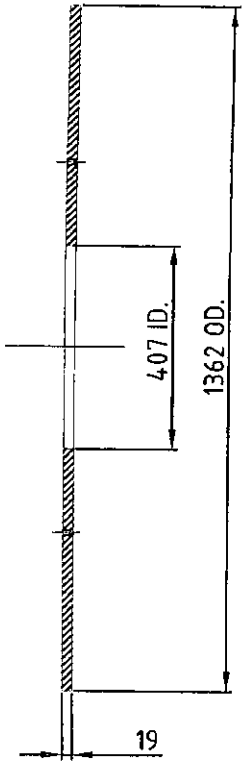

NOTES:
1) DIMENSIONS ARE IN mm
2) MATERIAL IS 3/4" THK. 304 S.S. PLATE
3) QTY. 2

SCOPE OF WORK:
(1) WE SUPPLY 3/4" THICK PLATE WITH
ID=407-3mm OD=1362+3mm TO MACHINE
ID=407±0.2mm OD=1362±0.2mm
(3) TAP M10 HOLE AS SHOW, DEPTH=14mm

ALL DIMENSIONS ARE IN mm
TOLERANCES: DECIMALS XXX=±.005 XX=±.01 X=±.1
ANGLES ±.5°
CONCENTRICITY ±.1 TOTAL INDICATION RUN OUT
PERPENDICULAR ±.05
(UNLESS OTHERWISE SPECIFIED)

THIRD ANGLE PROJECTION	WANG NMR INC 550 N CANYONS PARKWAY, LIVERMORE, CA 94550		
NAME: BACK END PLATE			
DWG #: MICE - 3300		SHT 1 OF 1	
MATERIAL: 304 STAINLESS STEEL		QTY	2
DWN BY: XU	DATE: NOV 15,2007	SCALE: TO FIT	DWG SIZE:
1ST CHK:	DATE:	2ND CHK:	DATE:

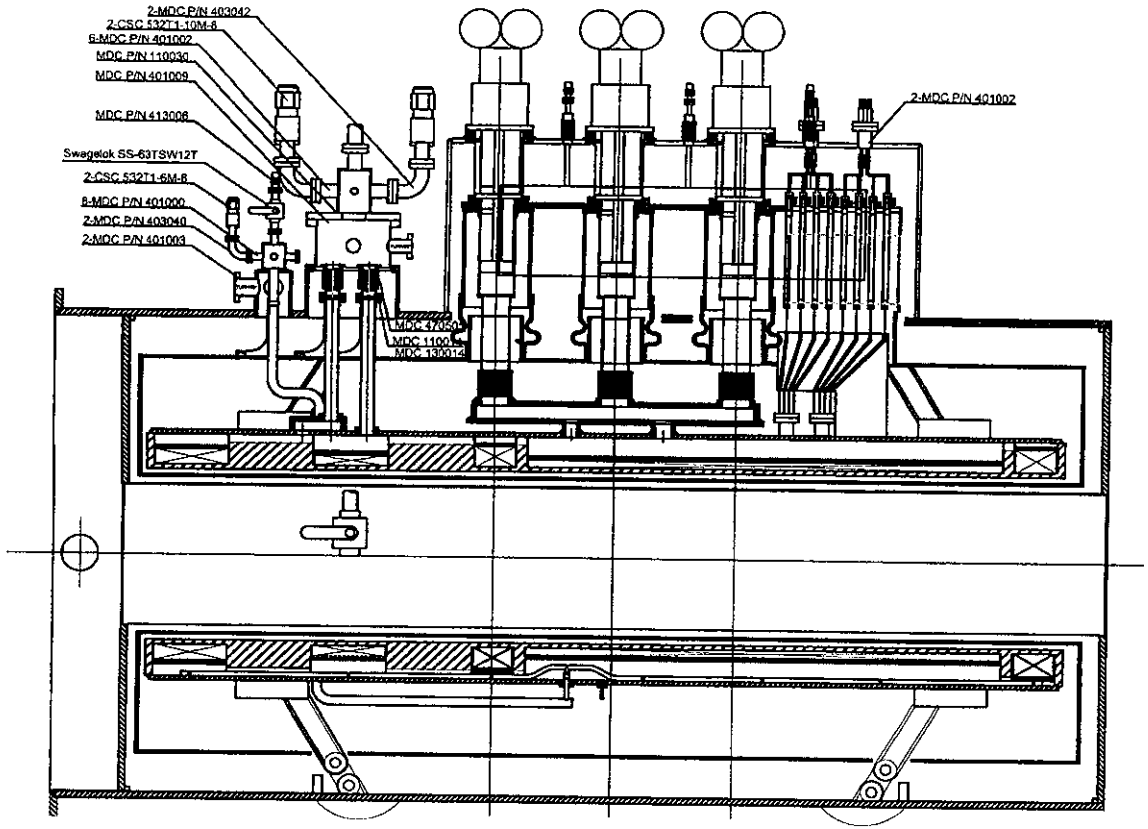

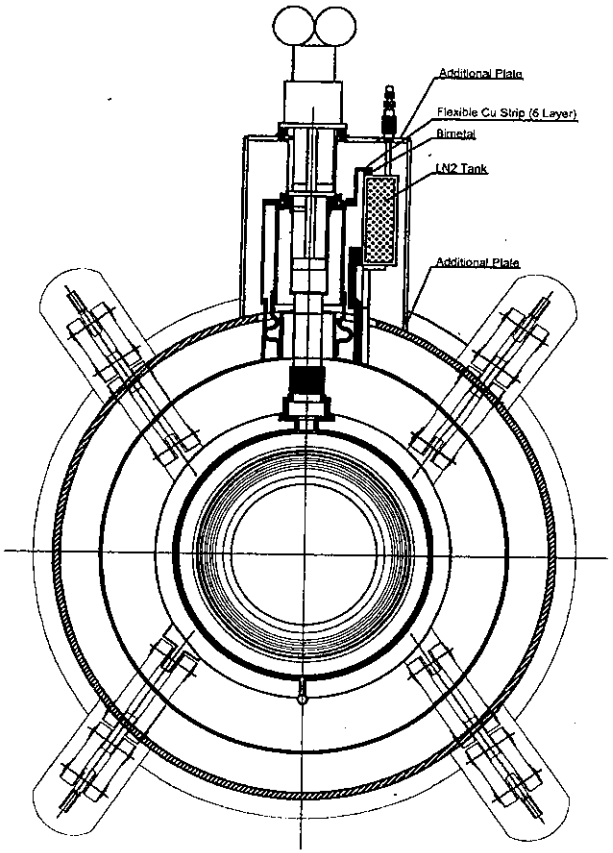

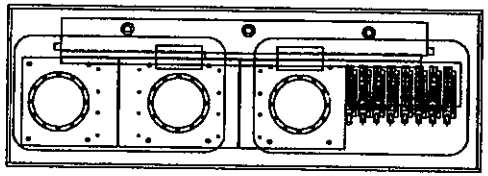

ALL DIMENSIONS ARE IN mm

FOR FABRICATION

THIRD ANGLE PROJECTION	WANG NMR INC 550 N CANYONS PARKWAY, LIVERMORE, CA 94551		
NAME: MICE TRACKER MODULE 4.5T TRACKER SOLENOID MAGNET			
DWG #: MICE-0000B		SHT 1 OF 1	
MATERIAL:		QTY	
DWN BY: XU	DATE: OCT.13,2008	SCALE: TO FIT	DWG SIZE:
1ST CHK:	DATE:	2ND CHK:	DATE:

Wang NMR

FABRICATION /ASSEMBLY FLOOR TRAVELER

Date: 3-10-2009

(1) Related Project: MICE

(2) Related Drawings: MICE-3600B

Receiving Material / Subassembly From: supplier,

Date: 3-10-2009

(3) Material Certification / Safety Data / QC

304 S.S

(4) Wang NMR QC

Dia.=_____, **L=** 1333 mm, **Thk=** 12.7 mm

W=500 mm

Check with Acceptance Spec. or P. O. Spec. and Approve to use

XU **.(Sign) Date** 3-10-2009

(5) Next Step Drawing: MICE-3600B

Assign to: Ying

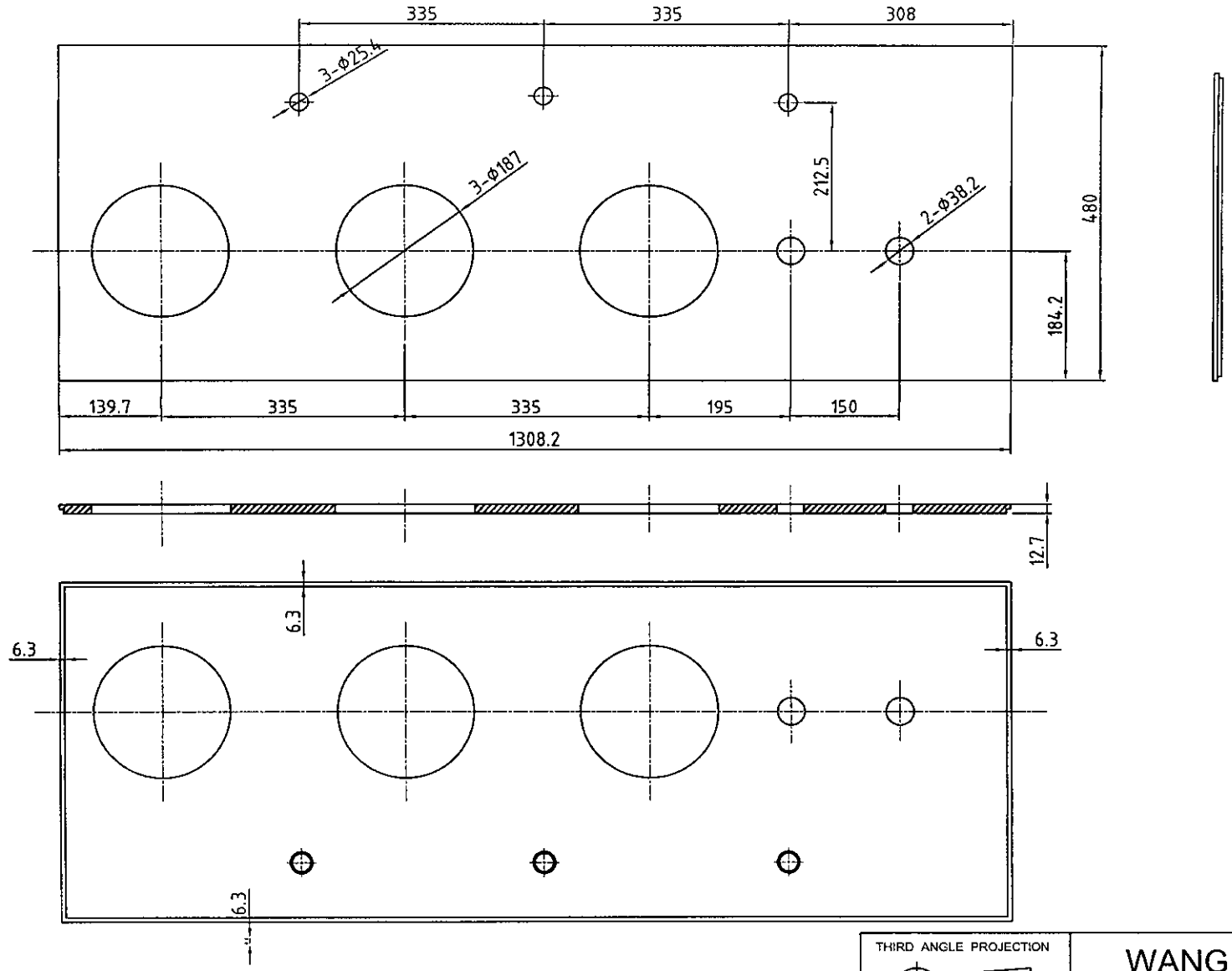

Material: 304 S.S PLATE
SIZE: 51.5"L X 18.9"W X 1/2"THICK
QTY: 1

FOR FABRICATION

ALL DIMENSIONS ARE IN mm
TOLERANCES: DECIMALS XXX=±.005 XX=±.01 X=±.1
ANGLES ±.5°
CONCENTRICITY ±.1 TOTAL INDICATION RUN OUT
PERPENDICULAR ±.05 (UNLESS OTHERWISE SPECIFIED)

THIRD ANGLE PROJECTION

WANG NMR INC
550 N CANYONS PARKWAY, LIVERMORE, CA 94551

NAME: CRYOCOOLER MOUNTING PLATE			
DWG #: MICE - 3600B		SHT 1 OF 1	
MATERIAL: STAINLESS STEEL 304		QTY	1
DWN BY: XU	DATE: OCT.9,2008	SCALE: TO FIT	DWG SIZE:
1ST CHK:	DATE:	2ND CHK:	DATE:

Wang NMR

FABRICATION /ASSEMBLY FLOOR TRAVELER

Date: 2-12-2008

(1) Related Project: MICB

(2) Related Drawings: MICB-3110B

Receiving Material / Subassembly From: Fab Pro,

Date: 2-12-2008

(3) Material Certification / Safety Data / QC

304 S.S.

(4) Wang NMR QC

Dia.= 140 mm OD, **L=** 2913 mm, **Thk=** 19 mm

Check with Acceptance Spec. or P. O. Spec. and Approve to use

XU **.(Sign) Date** 2-12-2008

(5) Next Step Drawing: MICB-3110B

Assign to: Wang

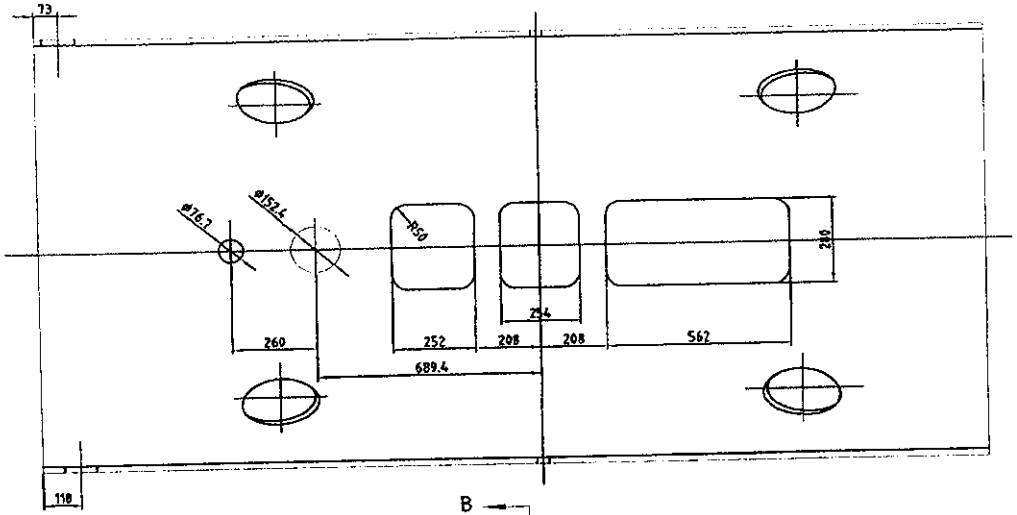

NOTES:
1) DIMENSIONS ARE IN mm
2) MATERIAL IS 19mm THK. 304 S.S. PLATE
3) WORK SCOPE: CUTTING MATERIAL, ROLLING, FULL PENETRATING WELDING AND CUTTING HOLES
4) QTY. 1

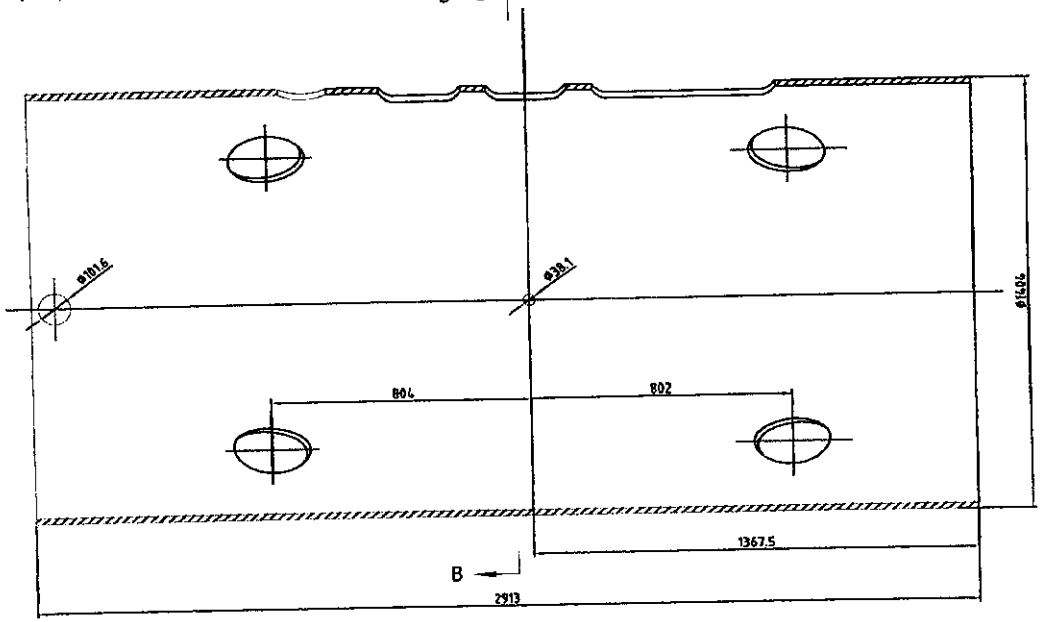

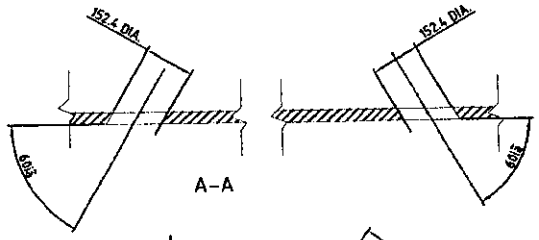

A–A

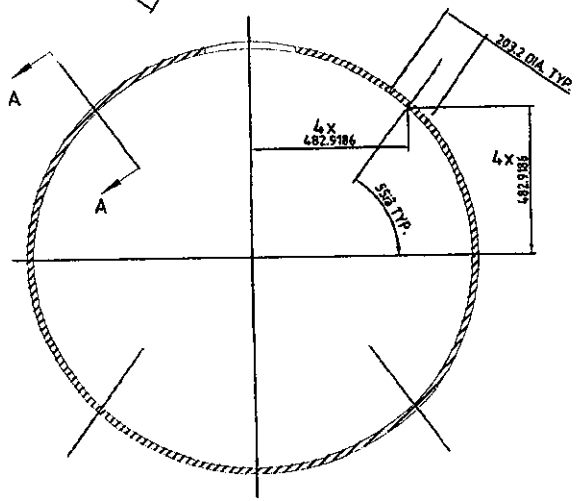

B–B

FOR FABRICATION

THIRD ANGLE PROJECTION	WANG NMR INC 550 N CANYONS PARKWAY, LIVERMORE, CA 94		
NAME: CYLINDER			
DWG #: MICE - 3110B		SHT 1 OF 1	
MATERIAL: STAINLESS STEEL 304		QTY	2
DWN BY: XU	DATE: NOV 7,2007	SCALE: TO FIT	DWG SIZE:
1ST CHK:	DATE:	2ND CHK:	DATE:

ALL DIMENSIONS ARE IN mm
TOLERANCES: DECIMALS XXX=±.005 XX=±.01 X=±.1
ANGLES ±.5°
CONCENTRICITY ±.1 TOTAL INDICATION RUN OUT
PERPENDICULAR ±.05 (UNLESS OTHERWISE SPECIFIED)

Wang NMR

FABRICATION /ASSEMBLY FLOOR TRAVELER

Date: 1-15-2008

(1) Related Project: MICE

(2) Related Drawings: MICE-6100B

Receiving Material / Subassembly From: Fab Pro,

Date: 1-15-2008

(3) Material Certification / Safety Data / QC

6061 Al

(4) Wang NMR QC

Dia.= 1143mm O.D, **L=** 2619mm, **Thk=** 5mm

Check with Acceptance Spec. or P. O. Spec. and Approve to use

Xu **.(Sign) Date** 1-15-2008

(5) Next Step Drawing: MICE-6100B

Assign to: Wang

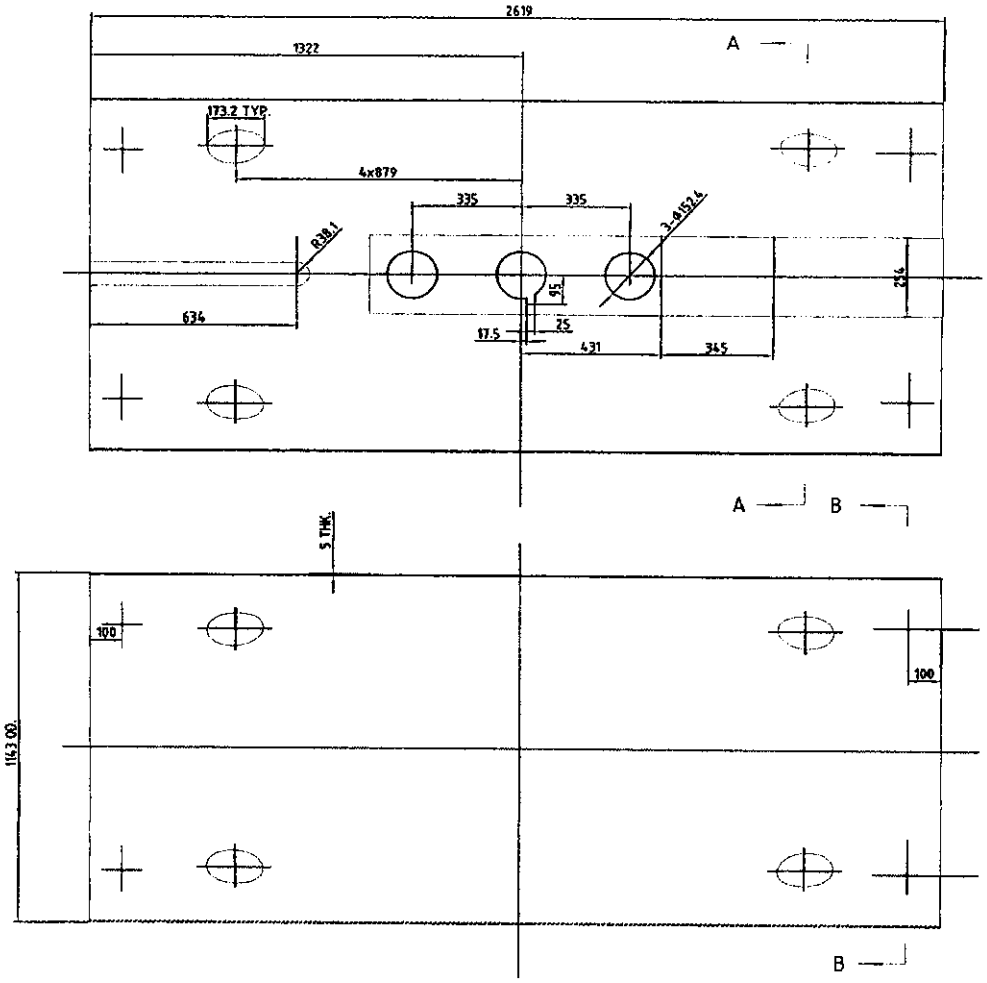

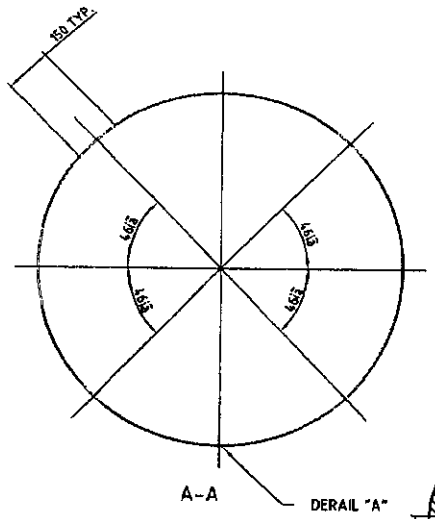

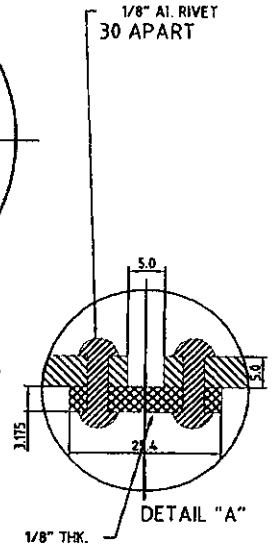

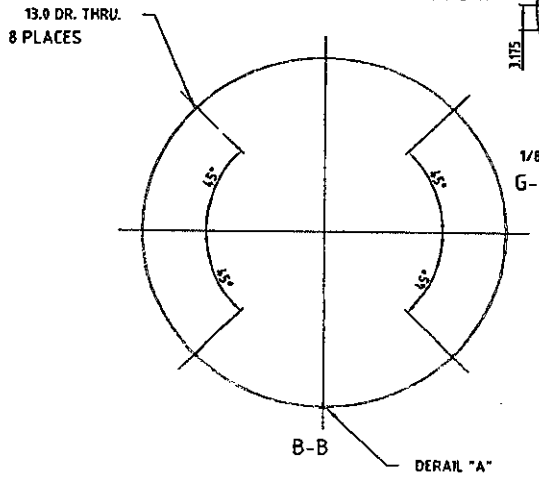

FOR FABRICATION

ALL DIMENSIONS ARE IN mm
TOLERANCES: DECIMALS XXX=±.005 XX=±.01 X=±.1
ANGLES ±.5°
CONCENTRICITY ±.1 TOTAL INDICATION RUN OUT
PERPENDICULAR ±.05 (UNLESS OTHERWISE SPECIFIED)

THIRD ANGLE PROJECTION

WANG NMR INC
550 N CANYONS PARKWAY, LIVERMORE, CA 9455

NAME: OUTER CYLINDER			
DWG #: MICE - 6100B		SHT 1 OF 1	
MATERIAL: AL		QTY	2
DWN BY: XU	DATE: NOV 29,2007	SCALE: TO FIT	DWG SIZE:
1ST CHK:	DATE:	2ND CHK:	DATE:

Wang NMR

FABRICATION /ASSEMBLY FLOOR TRAVELER

Date: 4-8-2008

(1) Related Project: MICE

(2) Related Drawings: MICE - C005 B

Receiving Material / Subassembly From: Fab Pro,

Date: 4-8-2008

(3) Material Certification / Safety Data / QC

6061 AL

(4) Wang NMR QC

Dia.= 728 mm I.D, **L=** 200 mm, **Thk=** 50.8 mm

Check with Acceptance Spec. or P. O. Spec. and Approve to use

Xu **.(Sign) Date** 4-8-2008

(5) Next Step Drawing: MICE - C005 B

Assign to: Zhang

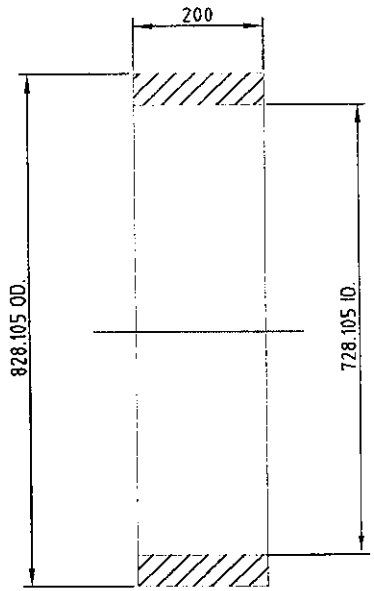

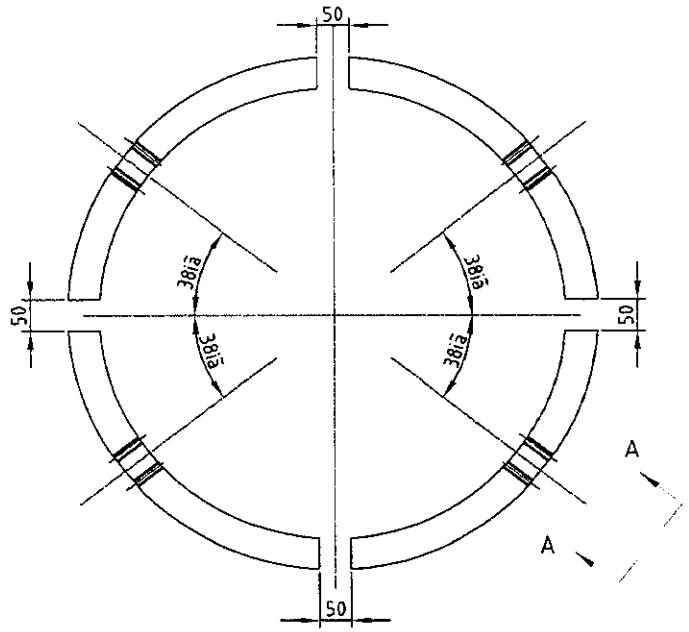

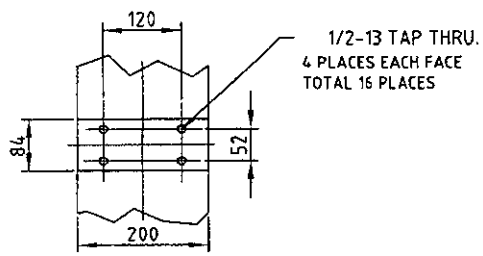

NOTES:
1) DIMENSIONS ARE IN mm
2) MATERIAL IS 6061T6
3) QTY. 2

FOR FABRICATION

THIRD ANGLE PROJECTION	WANG NMR INC 550 N CANYONS PARKWAY, LIVERMORE, CA 94550		
NAME: SUSPENSION RING			
DWG #: MICE-C005B		SHT 1 OF 1	
MATERIAL: AL		QTY	
DWN BY: XU	DATE: FEB 8,2008	SCALE: TO FIT	DWG SIZE:
1ST CHK: DATE:		2ND CHK: DATE:	

Wang NMR

FABRICATION /ASSEMBLY FLOOR TRAVELER

Date: 3-5-2008

(1) Related Project: MICE

(2) Related Drawings: MICE-C002B, MICE-C002B1

Receiving Material / Subassembly From: Fab Pro,

Date: 3-5-2008

(3) Material Certification / Safety Data / QC

6061 AL

(4) Wang NMR QC

Dia.= 724mm OD, **L=** 2518.6mm, **Thk=** 12.7 mm

Check with Acceptance Spec. or P. O. Spec. and Approve to use

Xu **.(Sign) Date** 3-5-2008

(5) Next Step Drawing: MICE-C005B

Assign to: Wang, Lago

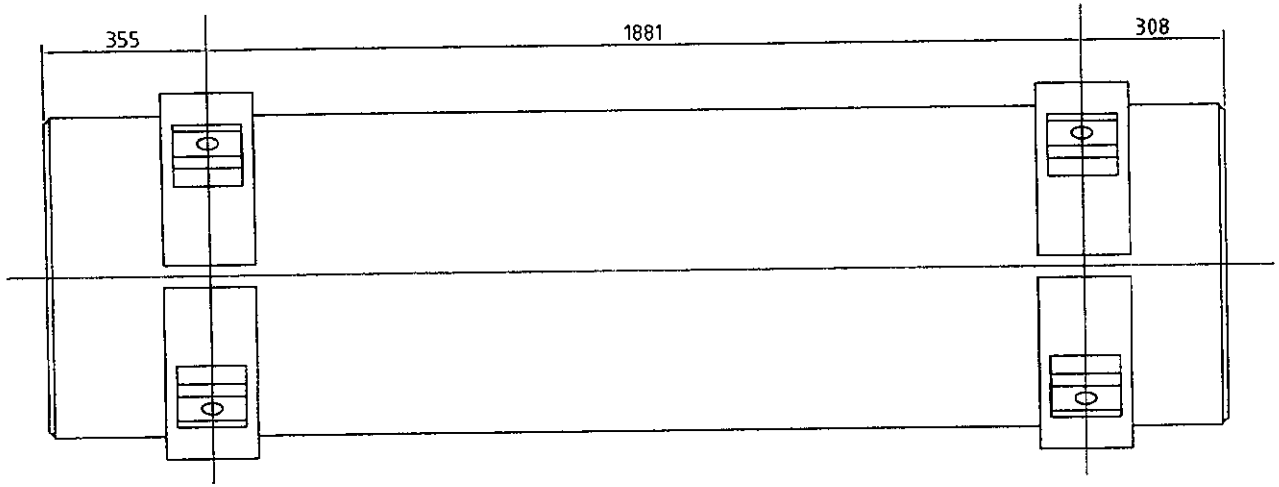

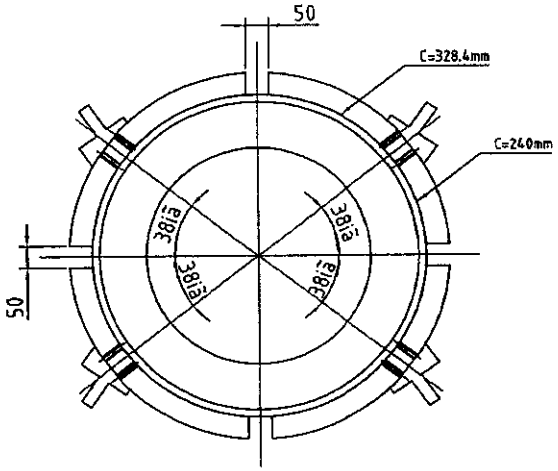

FOR FABRICAT ON

THIRD ANGLE PROJECTION	WANG NMR INC 550 N CANYONS PARKWAY, LIVERMORE, CA 94550		
NAME: MICE TRACKER MODULE 4.5T TRACKER SOLENOID MAGNET			
DWG #: MICE-C005B-1		SHT 1 OF 1	
MATERIAL:		QTY	
DWN BY: XU	DATE: OCT 31,2007	SCALE: TO FIT	DWG SIZE:
1ST CHK:	DATE:	2ND CHK:	DATE:

ALL DIMENSIONS ARE IN mm

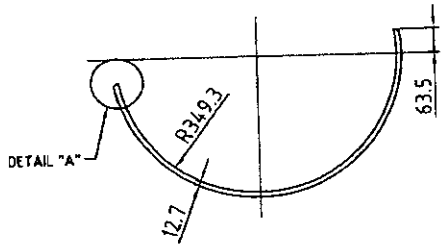

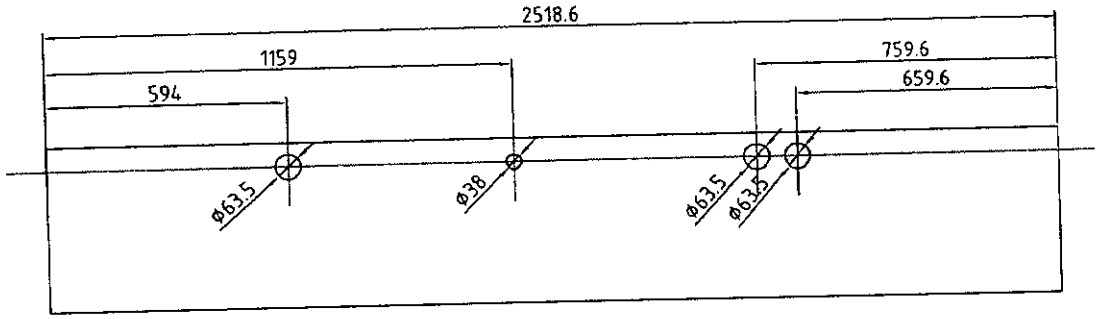

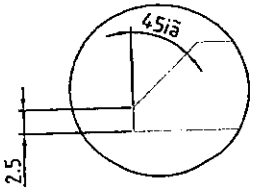

DETAIL "A"

NOTES:
1) DIMENSIONS ARE IN mm
2) MATERIAL IS 1/2" THICK 6061T6 ALUMINUM PLATE
3) WORK: CUTTING MATERIAL, ROLLING & TRAMFER EDGES
4) QTY. 1

FOR FABRICATION

THIRD ANGLE PROJECTION	WANG NMR INC 550 N CANYONS PARKWAY, LIVERMORE, CA 9455		
NAME: COIL FORM COVER			
DWG #: MICE - C002B		SHT 1 OF 1	
MATERIAL: AL		QTY	
DWN BY: XU	DATE: FEB 8,2008	SCALE: TO FIT	DWG SIZE:
1ST CHK:	DATE:	2ND CHK:	DATE:

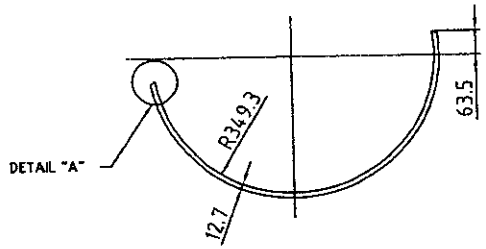

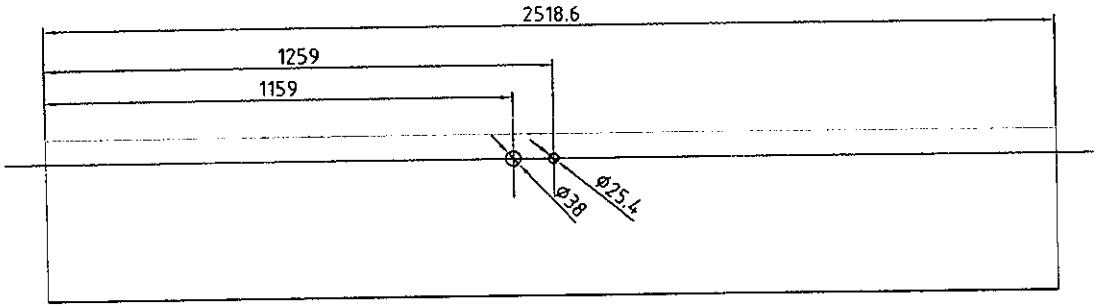

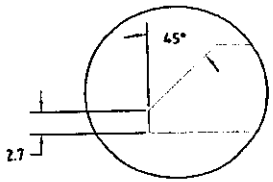

DETAIL "A"

NOTES:
1) DIMENSIONS ARE IN mm
2) MATERIAL IS 1/2" THICK 6061T6 ALUMINUM PLATE
3) WORK: CUTTING MATERIAL, ROLLING & TRAMFER EDGES
4) QTY. 1

FOR FABRICAT !ON

THIRD ANGLE PROJECTION	WANG NMR INC 550 N CANYONS PARKWAY, LIVERMORE, CA 94550		
NAME: COIL FORM COVER			
DWG #: MICE - C002B1		SHT 1 OF 1	
MATERIAL: AL		QTY	
DWN BY: XU	DATE: FEB 8,2008	SCALE: TO FIT	DWG SIZE:
1ST CHK:	DATE:	2ND CHK:	DATE:

Wang NMR

FABRICATION/ASSEMBLY FLOOR TRAVELER

Date : 5-6-2008

(1) Related Project : MICE

(2) Related Drawings : MICE-3200, MICE-3300

Receiving Material / Subassembly From : Quest Fab,

Date : 5-6-2008

(3) Material Certification/ Safety Data/ QC

304S.S.

(4) Wang NMR QC

Dia. = 1362 mm , **L =** _____, **Thk =** 19 mm

Check with Acceptance Spec. or P. O. Spec. and Approve to use

Xu .(Sign) Date 5-6-2008

(5) Next Step Drawing : MICE-0000B

Assign to : _____

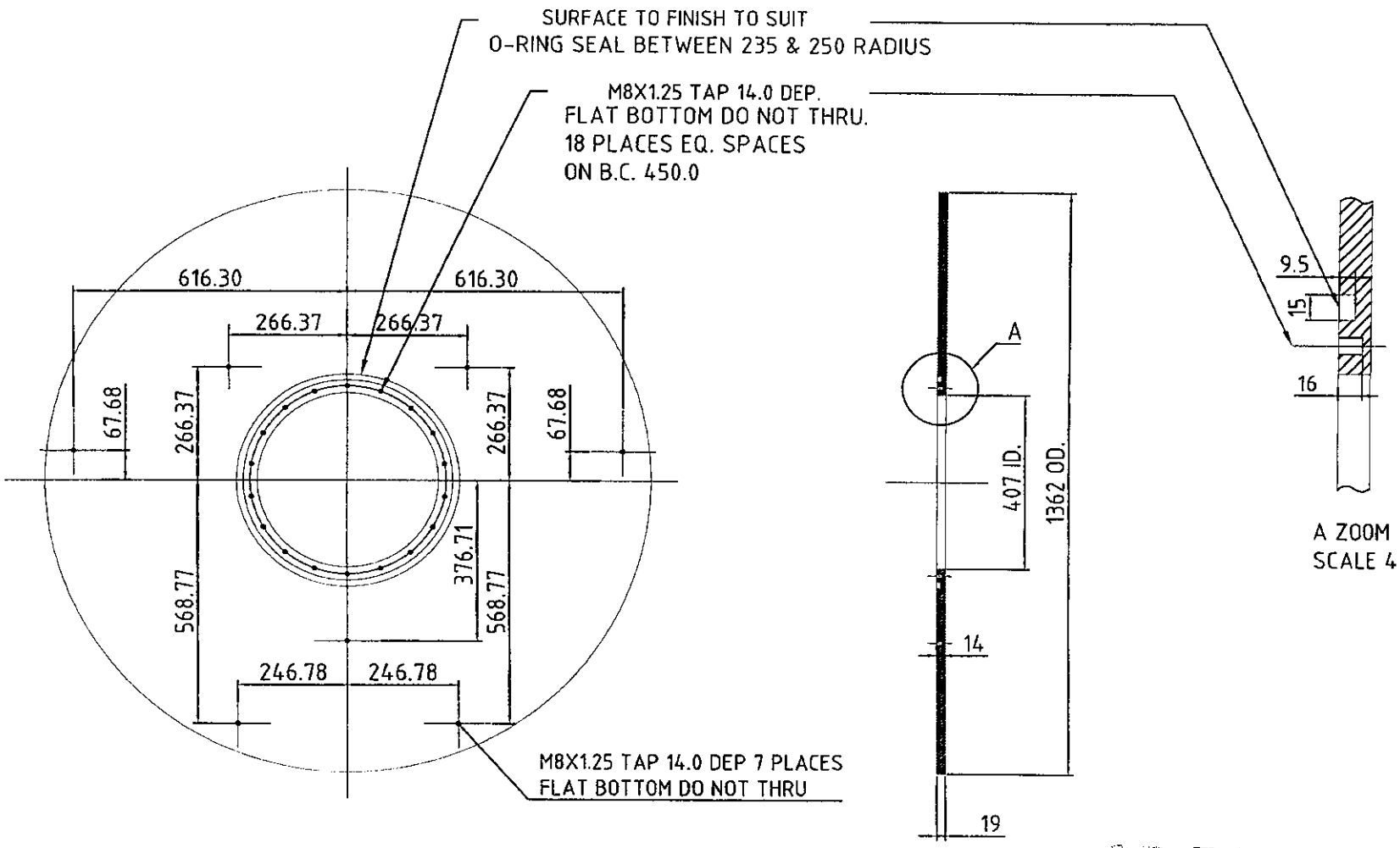

FABRICATION

SCOPE OF WORK:
(1) WE SUPPLY 3/4" THICK PLATE WITH
ID=407-3mm OD=1362+3mm TO MACHINE
ID=407iÀ0.2mm OD=1362iÀ0.2mm
(2) MACHINE ORING GROOVP + TAP M8x1.25
(3) TAP M8 HOLE AS SHOW, DEPTH=14mm

NOTES:
1) DIMENSIONS ARE IN mm
2) MATERIAL IS 3/4" THK. 304 S.S. PLATE
3) QTY. 2

ALL DIMENSIONS ARE IN mm
TOLERANCES: DECIMALS XXX=±.005 XX=±.01 X=±.1
ANGLES ±.5°
CONCENTRICITY ±.1 TOTAL INDICATION RUN OUT
PERPENDICULAR ±.05
(UNLESS OTHERWISE SPECIFIED)

THIRD ANGLE PROJECTION	WANG NMR INC 550 N CANYONS PARKWAY, LIVERMORE, CA 94550		
NAME: FRONT END PLATE			
DWG #: MICE - 3200		SHT 1 OF 1	
MATERIAL: 304 STAINLESS STEEL		QTY	2
DWN BY: XU	DATE: NOV 15,2007	SCALE: TO FIT	DWG SIZE:
1ST CHK:	DATE:	2ND CHK:	DATE:

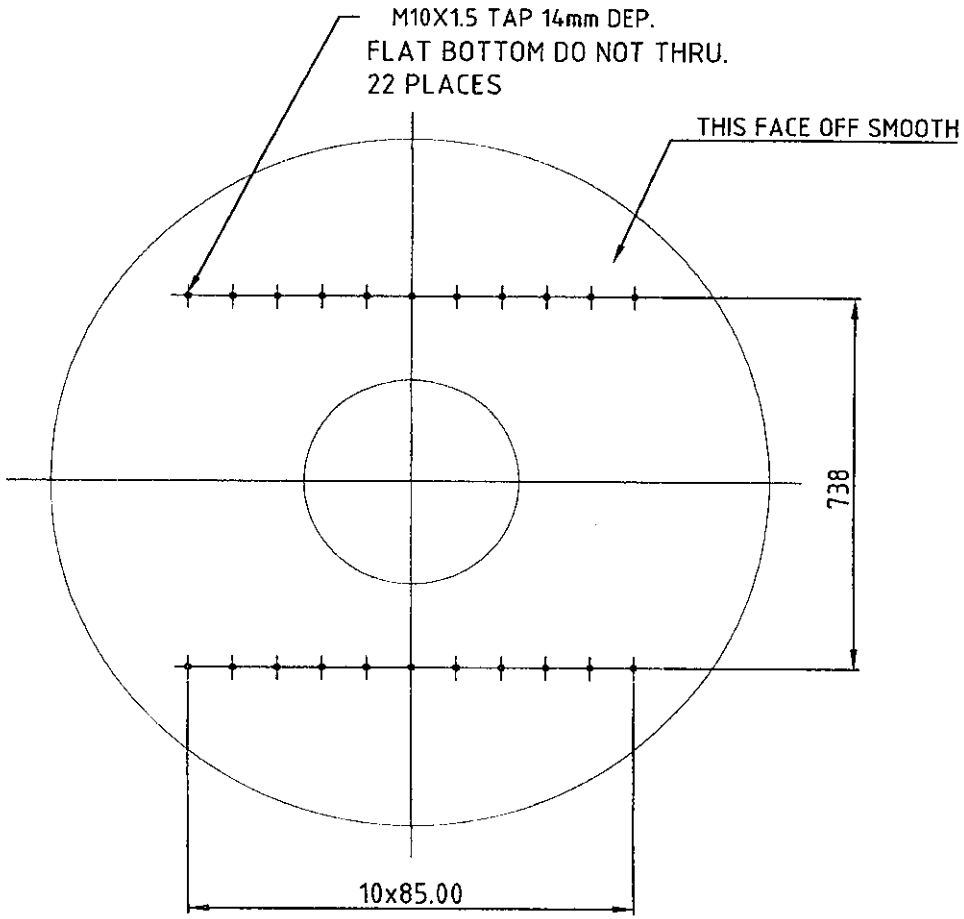

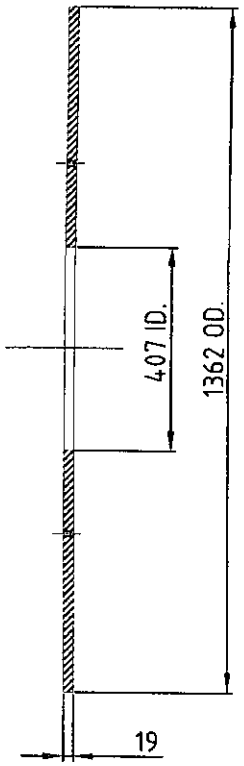

FABRICATION

SCOPE OF WORK:
(1) WE SUPPLY 3/4" THICK PLATE WITH
ID=407-3mm OD=1362+3mm TO MACHINE
ID=407±0.2mm OD=1362±0.2mm
(3) TAP M10 HOLE AS SHOW, DEPTH=14mm

NOTES:
1) DIMENSIONS ARE IN mm
2) MATERIAL IS 3/4" THK. 304 S.S. PLATE
3) QTY. 2

ALL DIMENSIONS ARE IN mm
TOLERANCES: DECIMALS XXX=±.005 XX=±.01 X=±.1
ANGLES ±.5°
CONCENTRICITY ±.1 TOTAL INDICATION RUN OUT
PERPENDICULAR ±.05 (UNLESS OTHERWISE SPECIFIED)

THIRD ANGLE PROJECTION	WANG NMR INC 550 N CANYONS PARKWAY, LIVERMORE, CA 94550		
NAME: BACK END PLATE			
DWG #: MICE - 3300		SHT 1 OF 1	
MATERIAL: 304 STAINLESS STEEL		QTY	2
DWN BY: XU	DATE: NOV 15,2007	SCALE: TO FIT	DWG SIZE:
1ST CHK:	DATE:	2ND CHK:	DATE:

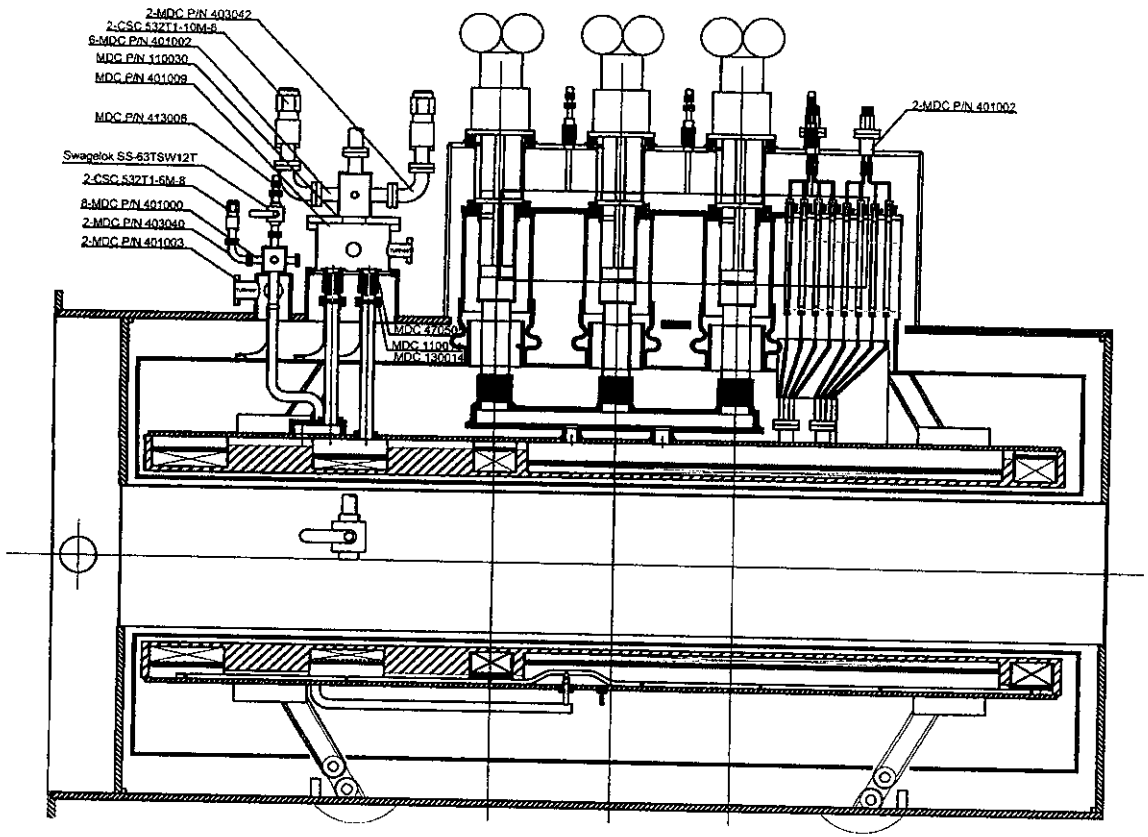

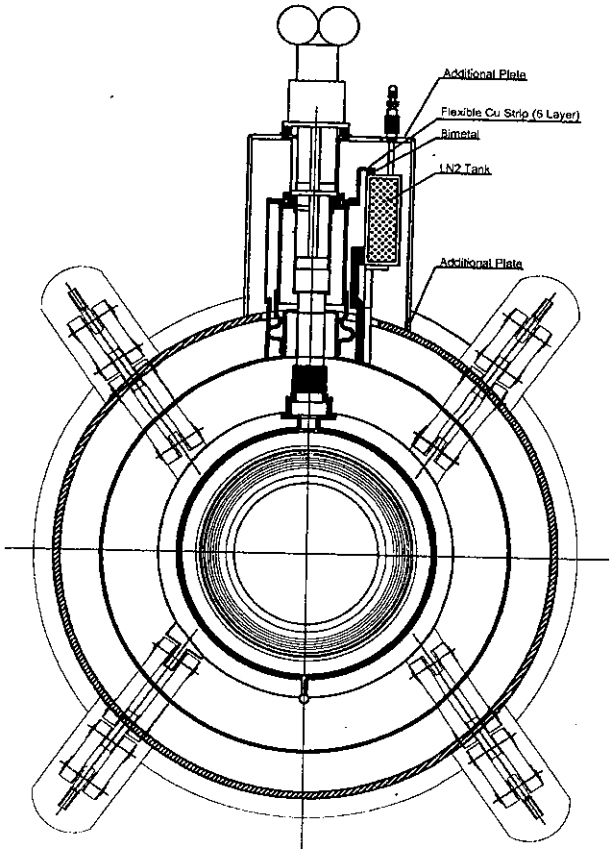

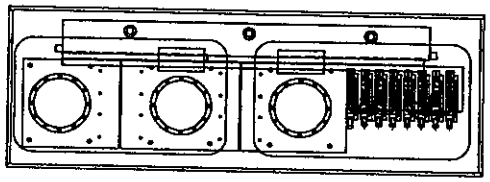

ALL DIMENSIONS ARE IN mm

FOR FABRICATION

THIRD ANGLE PROJECTION	WANG NMR INC 550 N CANYONS PARKWAY, LIVERMORE, CA 94551		
NAME: MICE TRACKER MODULE 4.5T TRACKER SOLENOID MAGNET			
DWG #: MICE-0000B		SHT 1 OF 1	
MATERIAL:		QTY	
DWN BY: XU	DATE: OCT.13,2008	SCALE: TO FIT	DWG SIZE:
1ST CHK:	DATE:	2ND CHK:	DATE: