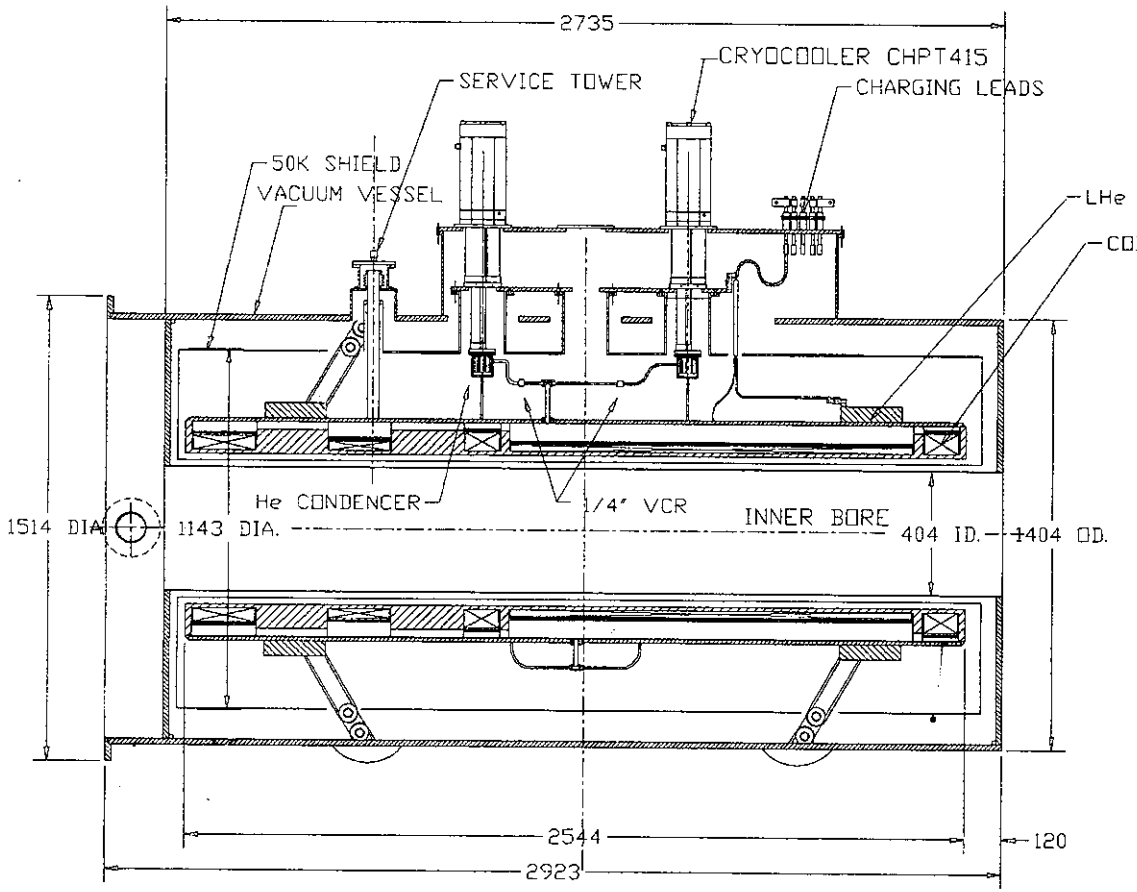

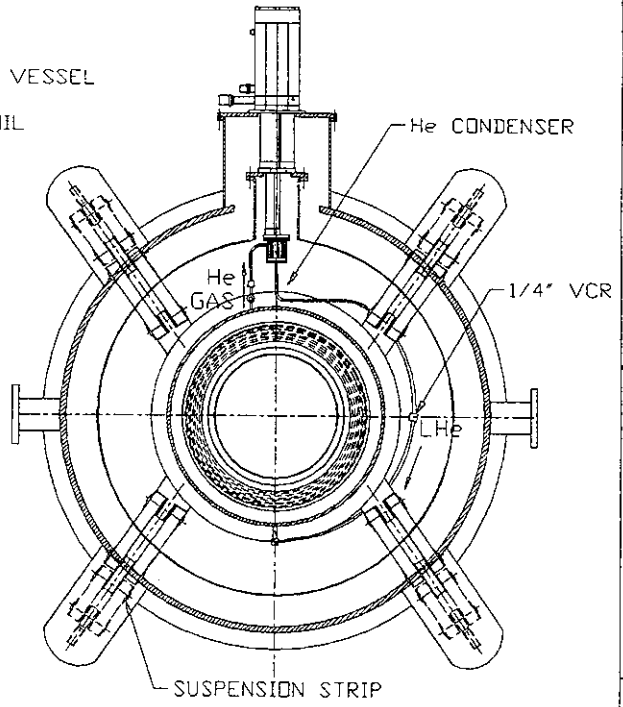

NOTES:
1) DIMENSIONS ARE IN mm

UNLESS OTHERWISE SPECIFIED TOLERANCES:
.XXX ± .005
.XX ± .02

WANG NMR, INC.
530 North canyons Parkway, Livermore, CA 94550

MICE TRACKER MODULE
4.5T TRACKER
SOLENOID MAGNET

D
MICE-0000 A

DO NOT SCALE