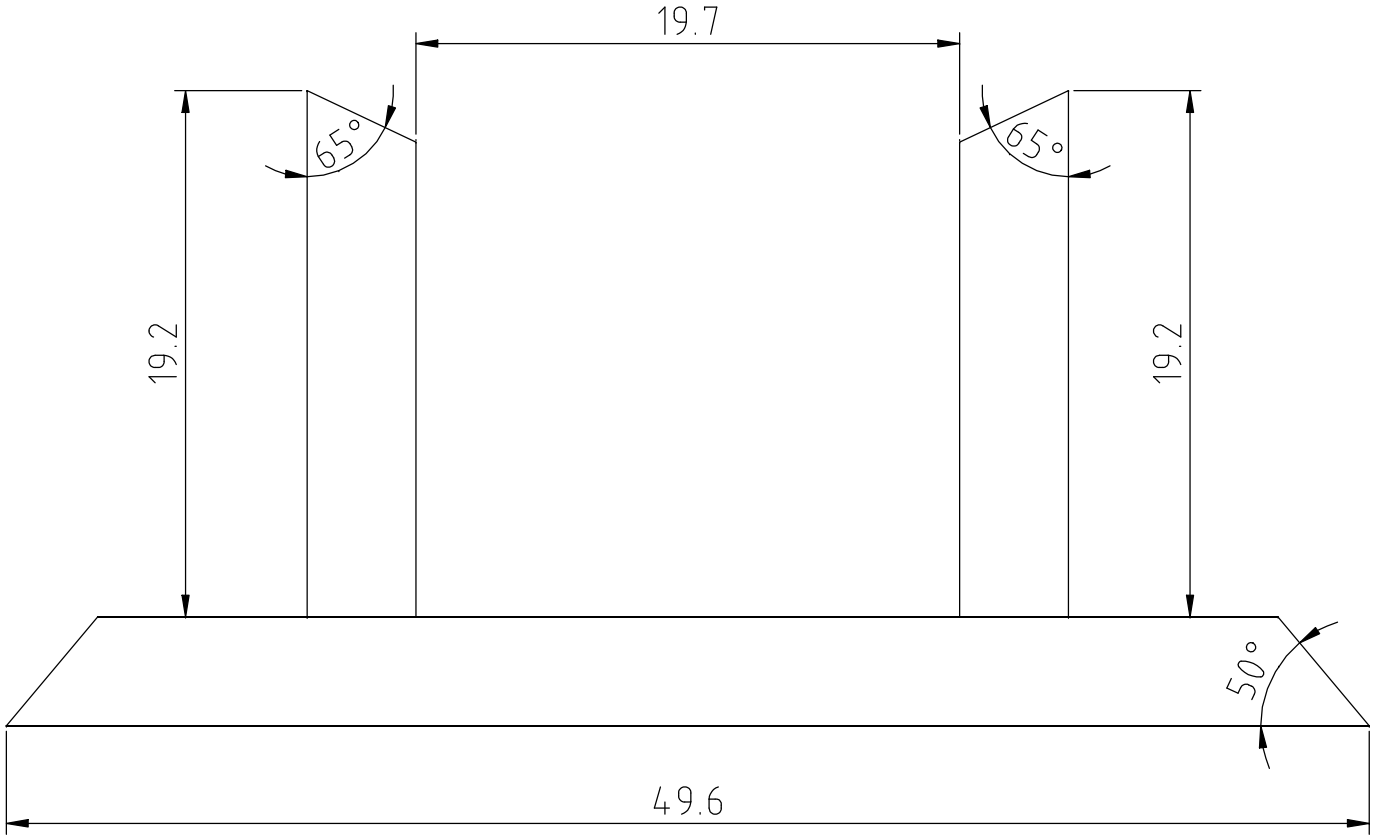

NOTE:
1) ALL DIMENSIONS ARE IN mm
2) MATERIAL IS 4"X4" 3/16"Wall S.S.304 Square Tube
Total Length 30Ft For 4 Leg

THIRD ANGLE PROJECTION	WANG NMR INC 550 N CANYONS PARKWAY, LIVERMORE, CA 94551		
NAME: MICE LEG MODIFICATION			
DWG #: MICE-F000B-02		SHT 1 OF 1	
MATERIAL: 304 S.S.		QTY	4
DWN BY: XU	DATE: OCT.16,2008	SCALE: TO FIT	DWG SIZE:
1ST CHK:	DATE:	2ND CHK:	DATE: