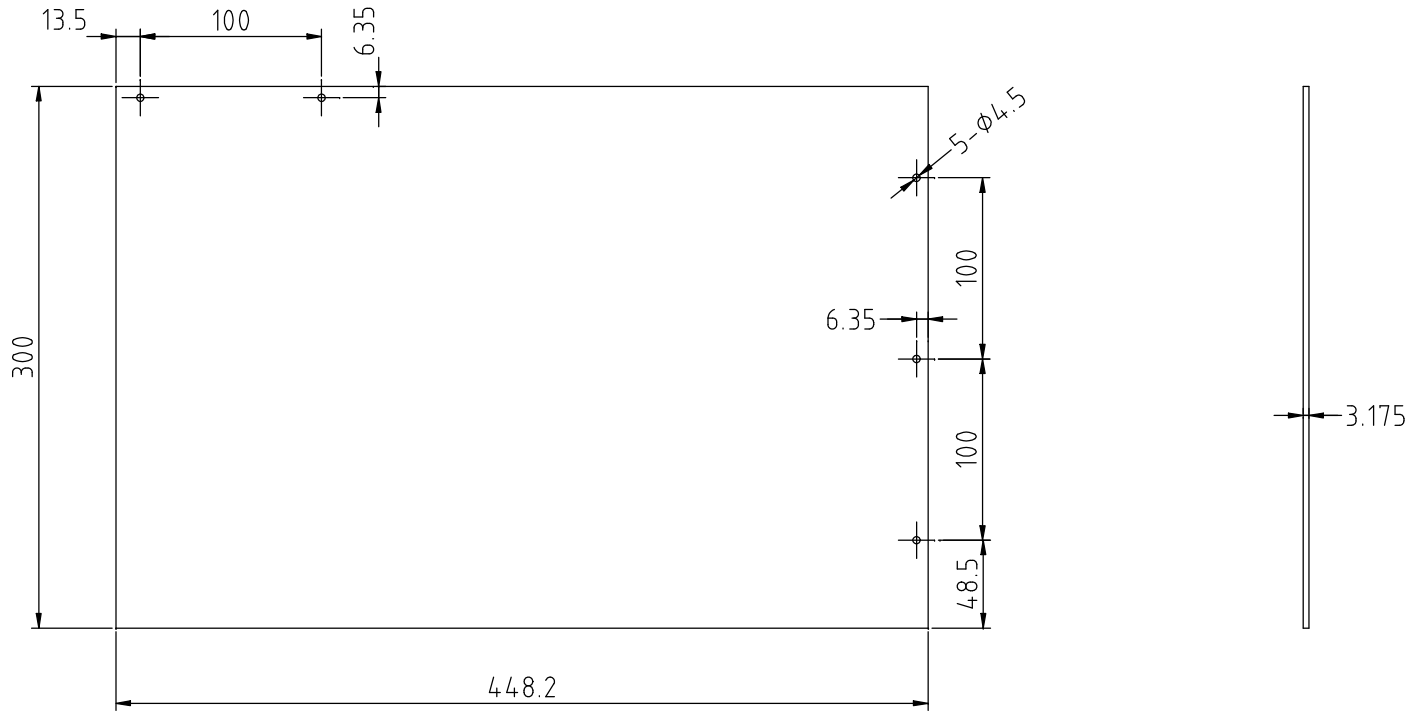

NOTE:
1. ALL DIMENSIONS ARE IN mm
2. MATERIAL IS 1/8" THICK OFHC PLATE 12" X 18"
3. QTY. 2

THIRD ANGLE PROJECTION	WANG NMR INC 550 N CANYONS PARKWAY, LIVERMORE, CA 94550		
NAME: MICE - 6519B			
DWG #: MICE - 6519B		SHT 1 OF 1	
MATERIAL: OFHC		QTY	2
DWN BY: XU	DATE: DEC 12,2007	SCALE: TO FIT	DWG SIZE:
1ST CHK:	DATE:	2ND CHK:	DATE: