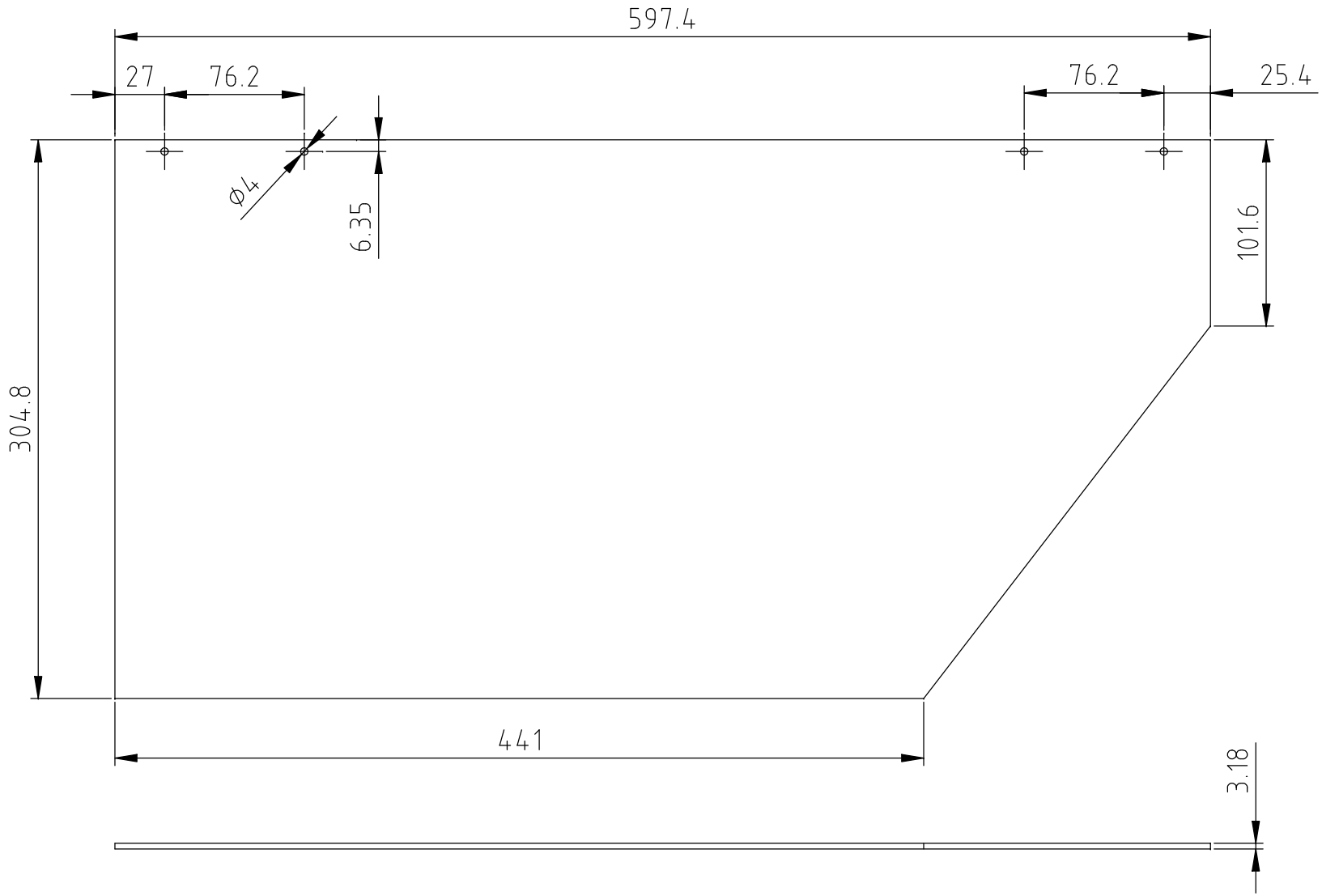

MATERIAL: OFHC PLATE
SIZE: 24" X 12" X 1/8"THICK
QTY: 1

ALL DIMENSIONS ARE IN mm
TOLERANCES: DECIMALS XXX=±.005 XX=±.01 X=±.1
ANGLES ±.5°
CONCENTRICITY ±.1 TOTAL INDICATION RUN OUT
PERPENDICULAR ±.05 (UNLESS OTHERWISE SPECIFIED)

THIRD ANGLE PROJECTION	WANG NMR INC 550 N CANYONS PARKWAY, LIVERMORE, CA 94551		
NAME: COPPER PLATE			
DWG #: MICE - 2 - M013		SHT 1 OF 1	
MATERIAL: OFHC		QTY	1
DWN BY: XU	DATE: Sept 15, 2009	SCALE: TO FIT	DWG SIZE:
1ST CHK:	DATE:	2ND CHK:	DATE: