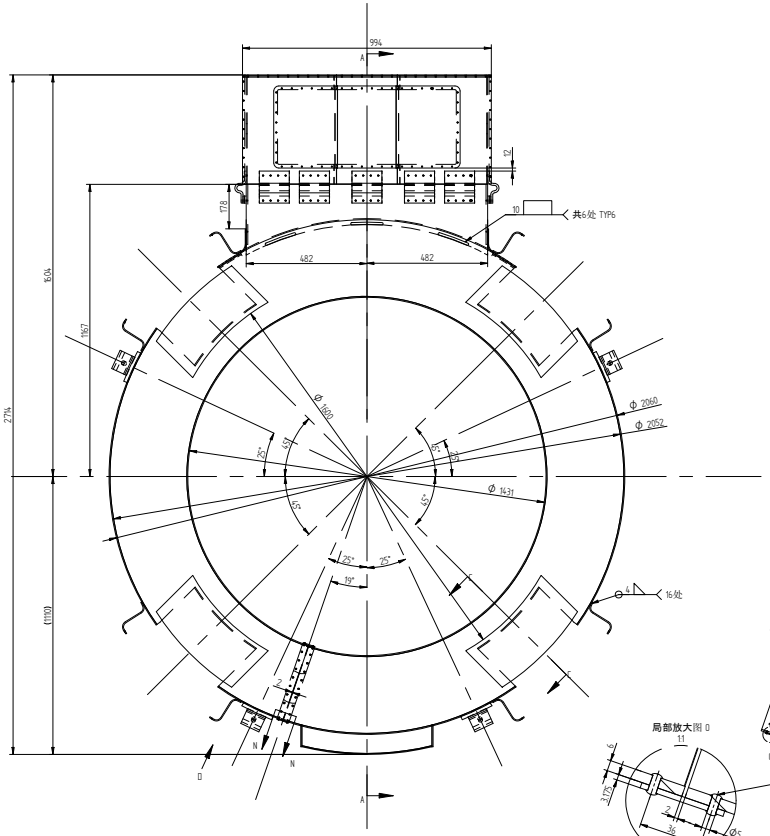

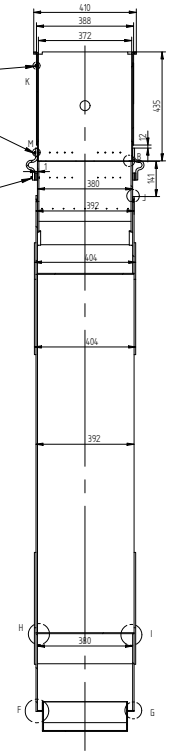

剖面Section A-A

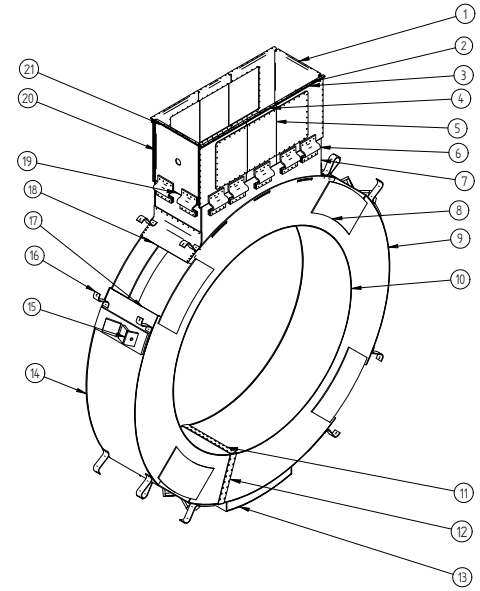

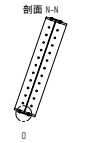

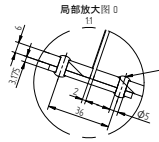

铆钉类型、规格、尺寸根据工艺条件自行决定。材料铝或铜均可，但不允许是钢。
No restriction for rivet size, TBD as assembing
Can be Al or Cu, but steel

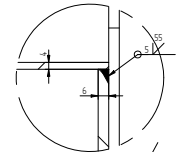

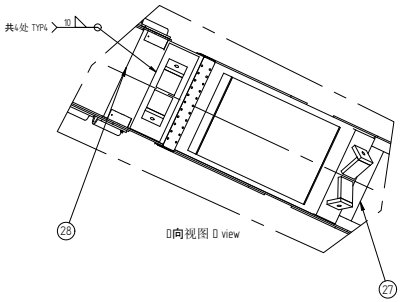

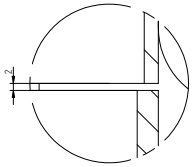

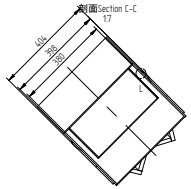

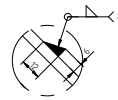

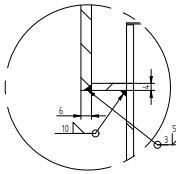

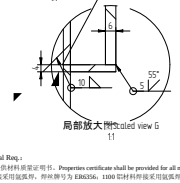

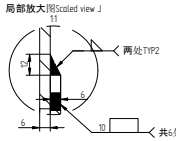

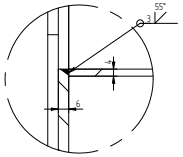

技术要求 Technical Req.：

1、所有材料均需提供材料质量证明书。Properties certificate shall be provided for all material.
2、6061 铝材料焊接采用氩弧焊，焊材牌号为 ER4356，1100 铝材料焊接采用氩弧焊，焊材牌号为 ER1100。Al 6061 parts shall be welded with argon-arc welding method and solder ER4356. Al 1100 parts shall be welded with argon-arc welding method and solder ER1100.
3、所有元件在焊接和装配前清洁处理，去除油脂、污物、灰尘等，吸干或烘干，且干燥保存，具体参见“MICE 冷质量和低温恒温器清洗及焊接程序”。 Clean all parts before welding or assembly and keep dry. All requirements written in “Cleaning and Welding Procedure for MICE Cold Mass and Cryostat” shall be complied.
4、焊接完成后必须对焊缝进行外观检查，焊缝表面不得有裂缝、气孔、夹渣及咬边等焊接缺陷，参见“MICE 冷质量和低温恒温器清洗及焊接程序”。 Visually check welding seams, they shall be defect free. Refer to “Cleaning and Welding Procedure for MICE Cold Mass and Cryostat”.
5、焊接坡口配制、Machining weld bevel to match.
6、零部件表面光洁，不得有划痕、刚憎型缺陷，表面电抛光。Surface free of scratch and defect.
7、冷屏上所有的机械连接构件表面处理加固胶行，以增强传热效果。Add In fend to all mechanical connection for heat conduction to enhance conductivity.
8、预屏上所有连接柔性管束宽度总和大于 1 米。Total length of all flexible connecting bridges on turret shield shall be longer than 1m.
9、冷屏上所有的机械连接处采用的金属紧固件为 H62 黄铜，且加螺垫垫片，数量根据图中孔的数量确定。All fastening hardware shall be made from H62 brass and add belleville washer. Total QTY shall be based on the number of total holes.
10、冷屏及其支撑等所有表面均需包扎反射绝热材料（MLI），包扎要求及方法见“MICE/MuCool 超导耦合磁体多层绝热材料 MLI 包扎技术说明”。 All surfaces of thermal shield and its support shall be wrapped with MLI, refer to “MIC/MuCool Superconding Coupling Magnet MLI Wrapping Procedure”.
11、冷屏在与冷质量组装、焊接前，必须经过与冷质量、外部真空容器及支撑网的试安装，确保无误后方可与冷质量组装、焊接。Before welding thermal shield to cold mass, shall conduct an assembling trail to ensure a fit with cold mass, vacuum vessel and support.
12、未注尺寸公差按 GB/T 1804-2000 m 级，未注形位公差按 GB/T 1184-1996 k 级制造。See title box for un-marked tolerances.

序号	代号	名称	数量	材料	计重	公重	备注
29		铆钉 RIVET	74		0 kg		
28	MMSF-0303-0020	冷屏外环罩3 TOP TURRET SHIELD OUTER COVER PART 3	1	1100	1.2 kg		
27	MMSF-0303-0019	冷屏外环罩2 TOP TURRET SHIELD OUTER COVER PART 2	1	1100	0.1 kg		
26	GB/T 5783	内热头螺栓M4x20 FH, M6X7	1	H62	0 kg		
25	MMSF-0300-0007	冷片重复接冷屏用螺钉长度 4 TURRET SHIELD FASTENER LENGTH 4	8	QBe1.7	0 kg		
24	GB/T 97.1	平垫圈 4 FW, M4X7	4	T2	0 kg		
23	GB/T 5783	内热头螺栓M4x16 FH, M4X7	2	H62	0 kg		
22	GB/T 5783	内热头螺栓M4x20 FH, M4X7	1	H62	0 kg		
21	MMSF-0303-0018	转接板2 FASTENING BAR 2 FOR TOP TURRET SHIELD	2	304	2 kg		
20	MMSF-0303-0017	转接板1 FASTENING BAR 1 FOR TOP TURRET SHIELD	4	304	3 kg		
19	MMSF-0303-0016	冷屏下部保温板2 TURRET THERMAL SHIELD LOWER PART 2	2	1100	2.9 kg		
18	MMSF-0303-0015	二级管引出件外壳盖板 TURRET THERMAL SHIELD COVER PLATE FOR POWER LEADER	2	1100	1.7 kg		
17	MMSF-0303-0014	冷屏外环板1 TURRET THERMAL SHIELD OUTER STIFFENER PART 1	2	1100	10.6 kg		
16	MMSF-0303-0013	冷片重复接件外部盖板 TURRET THERMAL SHIELD COVER PLATE FOR PANEL CONNECTOR	16	1100	1.2 kg		
15	MMSF-0303-0300	冷屏支撑板盖 TURRET THERMAL SHIELD SUPPORT COVERS	4		11.7 kg		
14	MMSF-0303-0012	冷屏布线板 TURRET THERMAL SHIELD WIRE PLATE 2	1	1100	23.1 kg		
13	MMSF-0303-0200	数据器件外壳 TURRET THERMAL SHIELD FOR DATA DAQ BOXES	1		3.5 kg		
12	MMSF-0303-0011	定位板2 INSULATION PLATE 2 FOR THERMAL SHIELD	2	G10	2 kg		
11	MMSF-0303-0010	定位板1 INSULATION PLATE 1 FOR THERMAL SHIELD	2	G10	2 kg		
10	MMSF-0303-0009	冷屏内门板 THERMAL SHIELD INNER DOOR	1	1100	18.8 kg		
9	MMSF-0303-0008	冷屏主环板 TURRET THERMAL SHIELD MAIN PLATE 1	1	1100	22.4 kg		
8	MMSF-0303-0007	冷屏侧加筋板 TURRET THERMAL SHIELD SIDE RECTIFIER PLATE	8	1100	11.1 kg		
7	MMSF-0303-0006	冷屏下部保温板1 TURRET THERMAL SHIELD LOWER PART 1	2	1100	6.2 kg		
6	MMSF-0303-0300	冷屏最终引线件 TURRET THERMAL SHIELD FOR FINAL LEADS	14		0 kg	按实际导	
5	MMSF-0303-0005	冷屏上部保温板 TURRET THERMAL SHIELD UPPER PART COVER PLATE	2	TU2	47.1 kg		
4	MMSF-0303-0004	转接板2 FASTENING BAR 2 FOR THERMAL SHIELD	2	304	2 kg		
3	MMSF-0303-0003	转接板1 FASTENING BAR 1 FOR THERMAL SHIELD	4	304	0 kg		
2	MMSF-0303-0002	冷屏上部保板2 TURRET THERMAL SHIELD UPPER PART 2	2	TU2	16.2 kg		
1	MMSF-0303-0001	冷屏上部保板1 TURRET THERMAL SHIELD UPPER PART 1	2	TU2	12.3 kg		

设 计				SSRF上海光源	
绘 图					
校 核				冷质量及冷屏	
审 核			计算机文件名	MMSF-0303-0000.dwg	
会 签			制图软件	Solid Edge	冷屏
			数量 重量	比例 图幅	
审 定			1	0.0 t	1:1 A0	MMSF-0303-0000	版本 A
批 准			共 1 张	第 张	

A			INITIAL REVISION	
REV	AUTHOR	APPROVER	DATE	CHANGE DESCRIPTION

UNLESS OTHERWISE NOTED ALL DIMENSIONS ARE IN MM
FRACTIONS ± 0.5
ANGLES ± 0.5°
RADIUS, CHAMFER ± 0.1

PROJECT NAME: MICE

ERNEST ORLANDO LAWRENCE BERKELEY NATIONAL LABORATORY
MECHANICAL DESIGN
MUON IONIZATION COOLING EXPERIMENT (MICE)
MULTI-PURPOSE SUPERCONDUCTING COUPLING MAGNET
THERMAL SHIELD

SCALE: 1:1 WT: 1.0 SHEET 1 OF 1 SIZE: 5 DWG NO. 27H900 A