REQ	ITEM	PART NUMBER	DESCRIPTION
			ALUMINUM PLATE

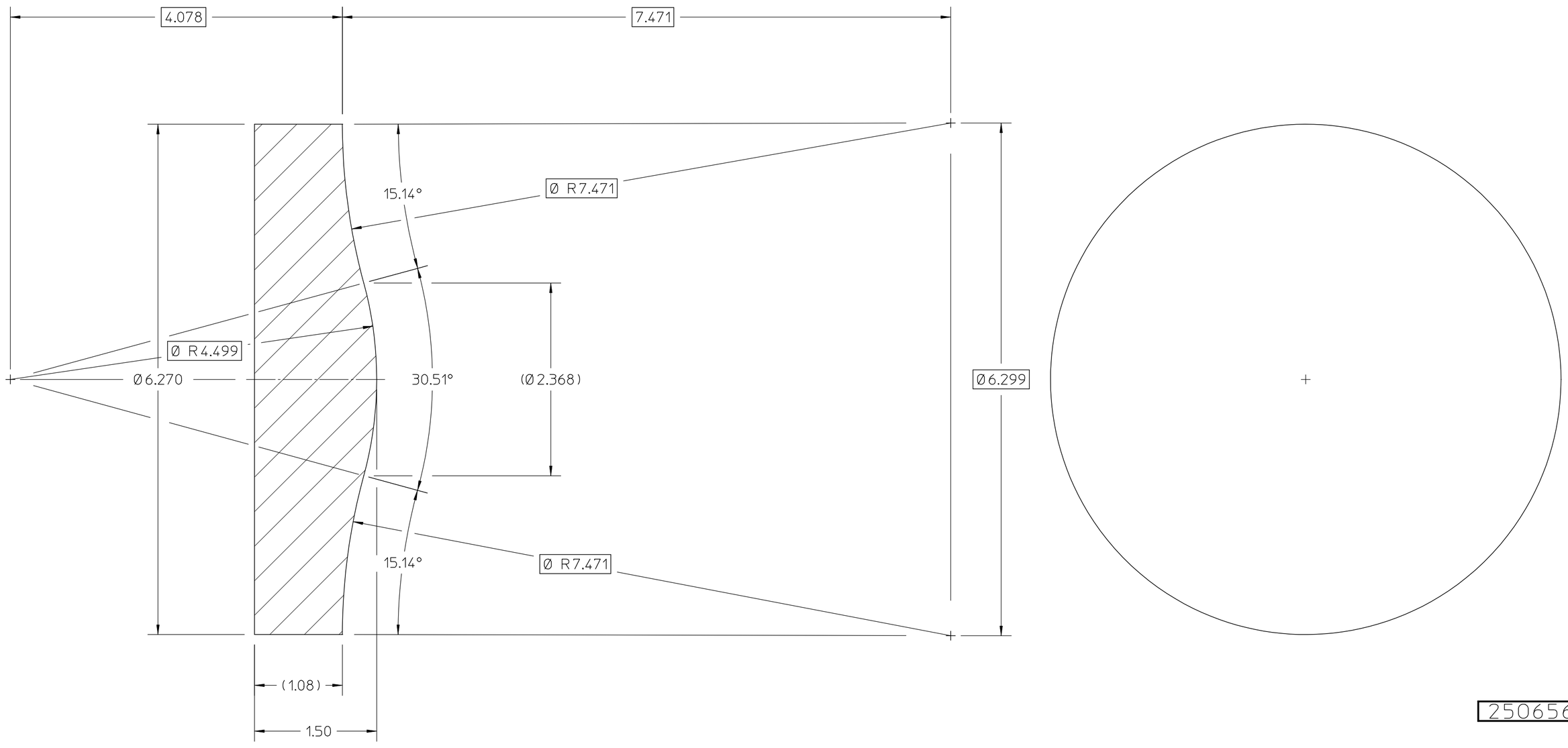

REV	DWG	CHK	ZONE	DATE	CHANGES

UNLESS OTHERWISE SPECIFIED

TOLERANCES			
	.X ± -	FRAC. ±1/64	
	.XX ± .01	ANGLES ±.01°	
	.XXX ± .005	FINISH 63 √	

THREADS ARE CLASS 2
CHAMFER ENDS OF ALL SCREW THREADS 30°.
CUT 1.5 PITCH THRD RELIEF WITH ROUND NOSE TOOL ON MACHINE CUT THREADS.
BREAK EDGES .016 MAX. ON MACHINED WORK
REMOVE BURRS WELD SPLATTER & LOOSE SCALE
REFERENCES: ANSI Y14.5 & B46.1.

SHOP ORDERS

ACCT. NO.		SERIAL NO.
DATE ISSD	DATE REQD.	NO. REQD.
DELIVER TO		
SURFACE TREATMENT	DEGREASE	
IDENT. METH.	-	
DWG. BY	MACGILL	DATE 09-11-03
CHK. BY	-	DATE -

LAWRENCE BERKELEY LABORATORY
UNIVERSITY OF CALIFORNIA-BERKELEY

MUON COLLIDER

805 MHz MUON CAVITY PROTOTYPE

CURVED WINDOW-ALUMINUM FORM-CONVEX

PATENT CLEAR	DWG. TYPE	SHOWN ON	SCALE	DO NOT SCALE PRINTS
	CD	-	FULL	
MICROFILMED	DESIGN ACCT. NO.	CATEGORY CODE	DWG. NO. / SIZE	REV.
	UC4267	-	2506563	-