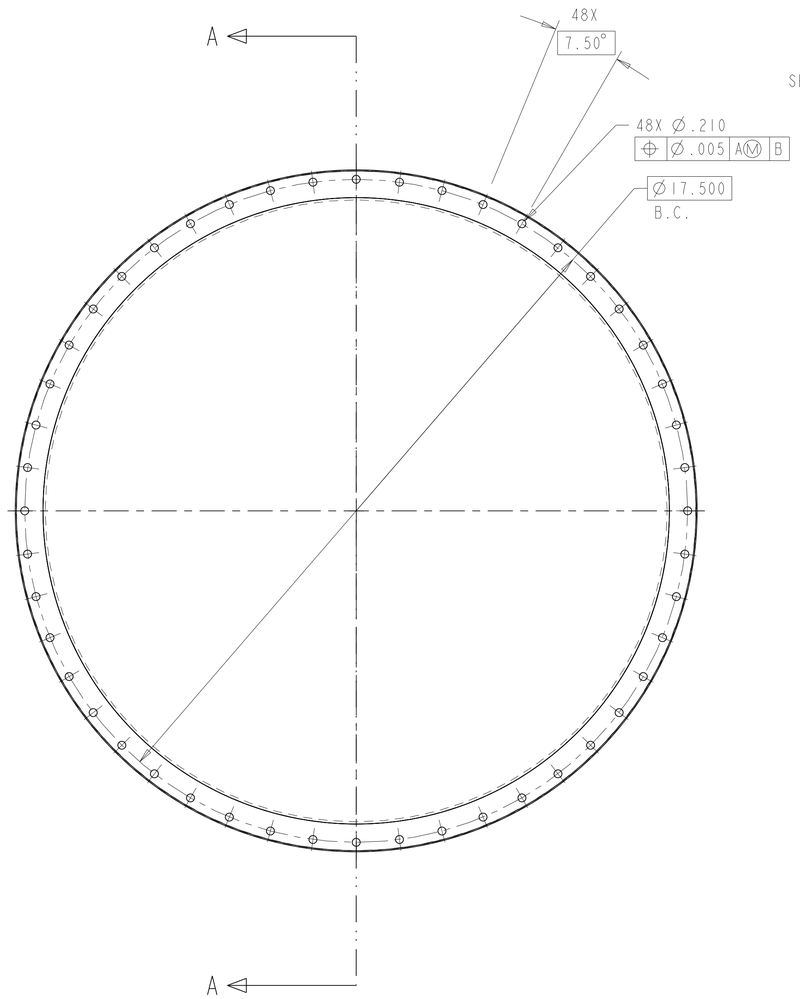

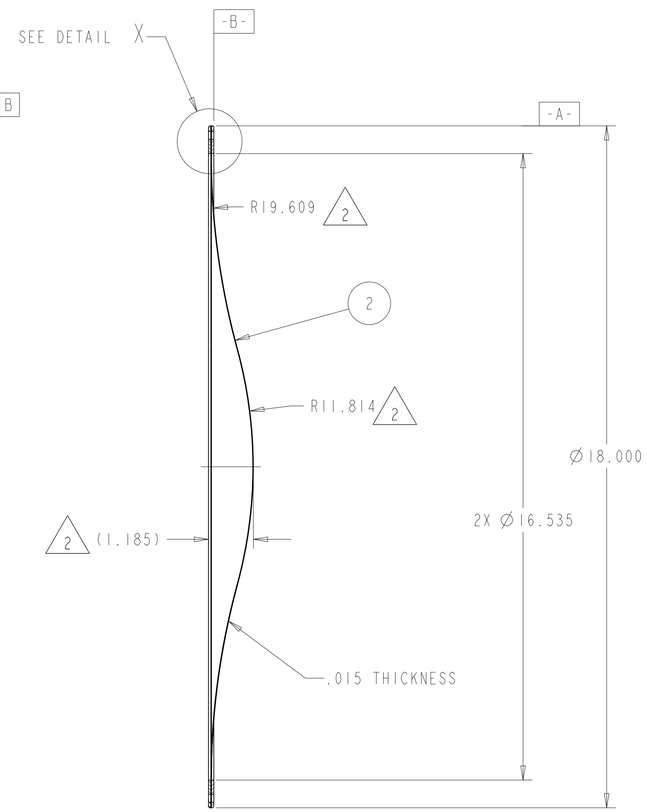

SECTION A-A

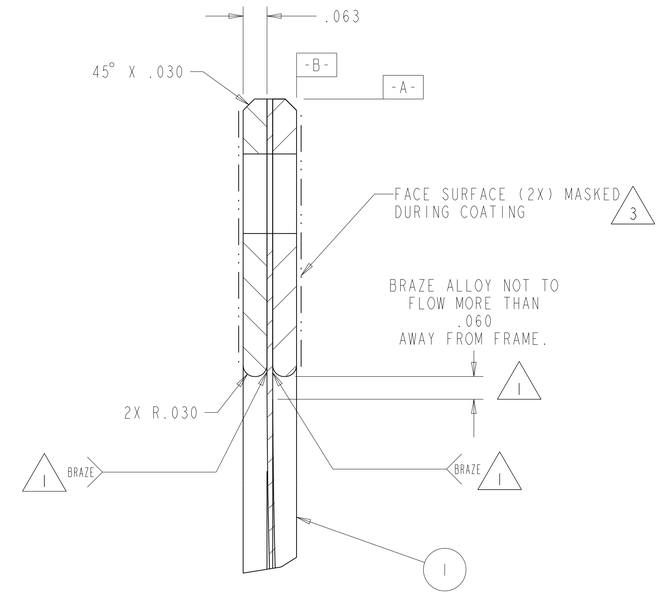

DETAIL X
SCALE 5.000

NOTES: (UNLESS OTHERWISE SPECIFIED)

1. BRAZE ALLOY MUST EXTEND UP TO I.D. OF COPPER RING WITH NO GAPS PRESENT. ALLOY NOT TO FLOW ONTO EXPOSED BERYLLIUM SURFACE.

2. FORMING TOLERANCE ±.050" FORMED FOIL TO BE FREE OF ANY VISIBLE WRINKLES.

3. COAT BERYLLIUM SURFACES WITH TITANIUM-NITRIDE AFTER BRAZING. THICKNESS OF COATING IS 160 TO 240 ANGSTROMS.

REQD	ITEM	PART NO.	DESRIPTION	MATERIAL
1	2	-	FORMED BERYLLIUM FOIL, .015"THK	BE PS-200
2	1	-	COPPER RING	CU

REV	AUTHOR	APPROVER	DATE	CHANGE DESCRIPTION
B	RLM	SPV	6/30/04	POS TOLS FOR MOUNTING HOLES, MOUNTING HOLE Ø. WAS .196, CLARIFY COATING PROCESS, ADD ROUND TO INNER EDGE OF FRAME, CLARIFY BRAZING PROCESS.
A	RLM	SPV	4/15/04	INITIAL RELEASE

UNLESS OTHERWISE SPECIFIED
TOLERANCES: .X± 0.1 .XX± 0.02 .XXX± 0.003
FRACTIONS: ± 1/64
ANGLES: ± 1.00°
MACH. SURFS.: 125√ OR BETTER
REF:ASME Y14.5M-1994, THREADS ARE CLASS 2
BREAK EDGES .016 MAX. ON MACHINED WORK
REMOVE BURRS, WELD SPLATTER & LOOSE SCALE

PROJECT NAME:
UNIQUE NUMBER:
DO NOT SCALE PRINT
SCALE: 0.500
CATEGORY CODE: 250003
THIRD ANGLE PROJECTION

ERNEST ORLANDO LAWRENCE BERKELEY NATIONAL LABORATORY
UNIVERSITY OF CALIFORNIA

MUON COLLIDER
201 MHz MUON CAVITY PROTOTYPE
BERYLLIUM WINDOW

1 SHEET OF 1 | SIZE: D | DWG NO: 25o640 | REV B