REQ	ITEM	PART NUMBER	DESCRIPTION
1	1		.63 THICK 316L STAINLESS STEEL PLATE
1	2		MINI-CONFLAT FLANGE,TAPPED,Ø.502 THRU HOLE, MDC #130003

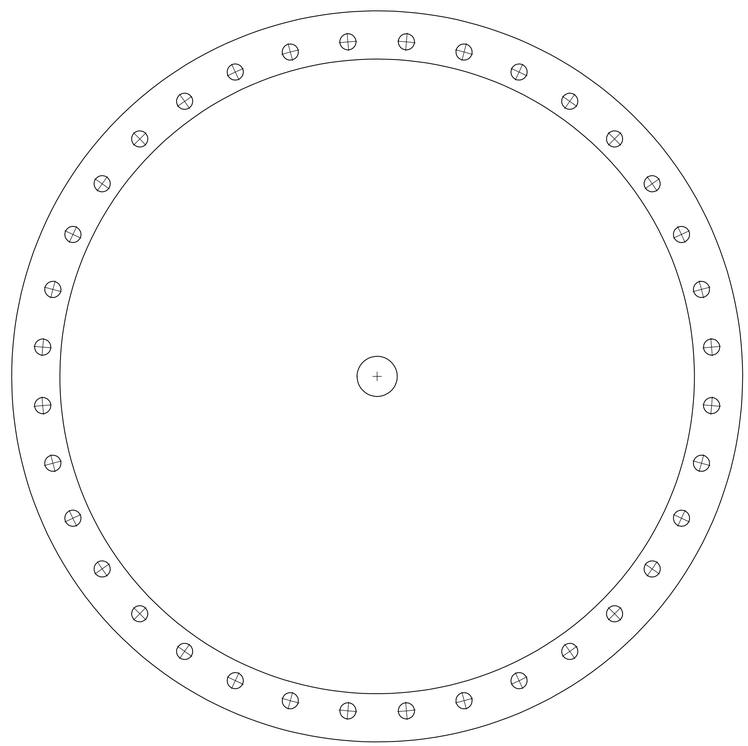

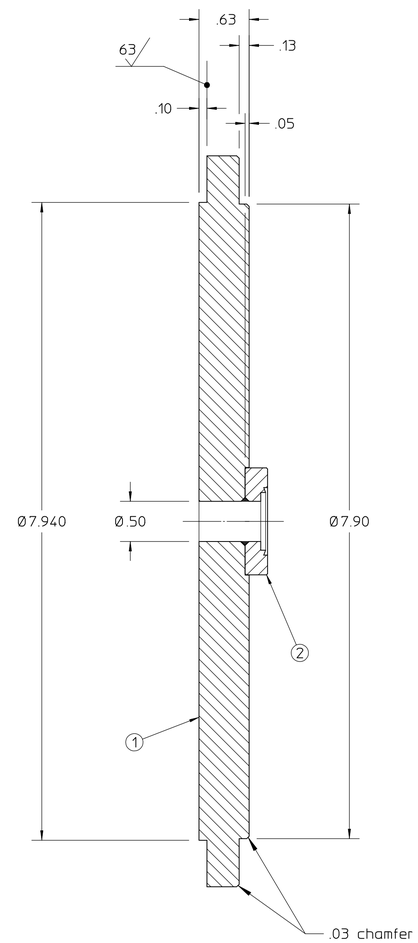

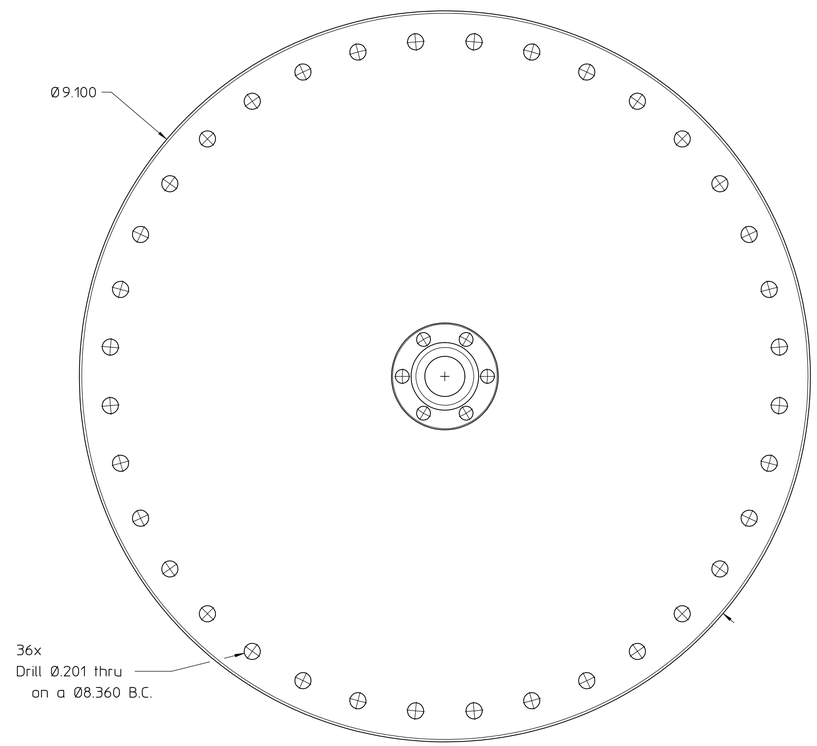

21K5244

NOTE:
WELD ITEM 1 TO ITEM 2 INTERNALLY
AS SHOWN. THE WELD MUST BE He LEAK
TIGHT TO 1 X 10 -9 SENSITIVITY.

REV	DWG	CHK	ZONE	DATE	CHANGES

UNLESS OTHERWISE SPECIFIED

TOLERANCES			
	.X ± -	FRAC. ± 1/64	
	.XX ± .01	ANGLES ± 1°	
	.XXX ± .005	FINISH 125√	

THREADS ARE CLASS 2.
CHAMFER ENDS OF ALL SCREW THREADS 30°.
CUT 1.5 PITCH THRD RELIEF WITH ROUND NOSE TOOL ON MACHINE CUT THREADS.
BREAK EDGES .016 MAX. ON MACHINED WORK
REMOVE BURRS WELD SPLATTER & LOOSE SCALE
REFERENCES: ANSI Y14.5 & B46.1.

SHOP ORDERS

ACCT. NO.		SERIAL NO.
DATE ISSD	DATE REQD.	NO. REQD.
DELIVER TO		
SURFACE TREATMENT	UHV CLEAN	
IDENT. METH.	-	
DWG. BY	MACGILL	DATE 11-17-00
CHK. BY	-	DATE -

LAWRENCE BERKELEY LABORATORY
UNIVERSITY OF CALIFORNIA-BERKELEY

PLASMA APPLICATIONS GROUP

Mu COOL HP TEST CAVITY

SIDE PLATE-1

PATENT CLEAR	DWG. TYPE	SHOWN ON	SCALE	DO NOT SCALE PRINTS
	CD	21K5196	FULL	
MICROFILMED	DESIGN ACCT. NO.	CATEGORY CODE	DWG. NO.	SIZE / REV.
	72MCC2	PA0003	21K5244	-