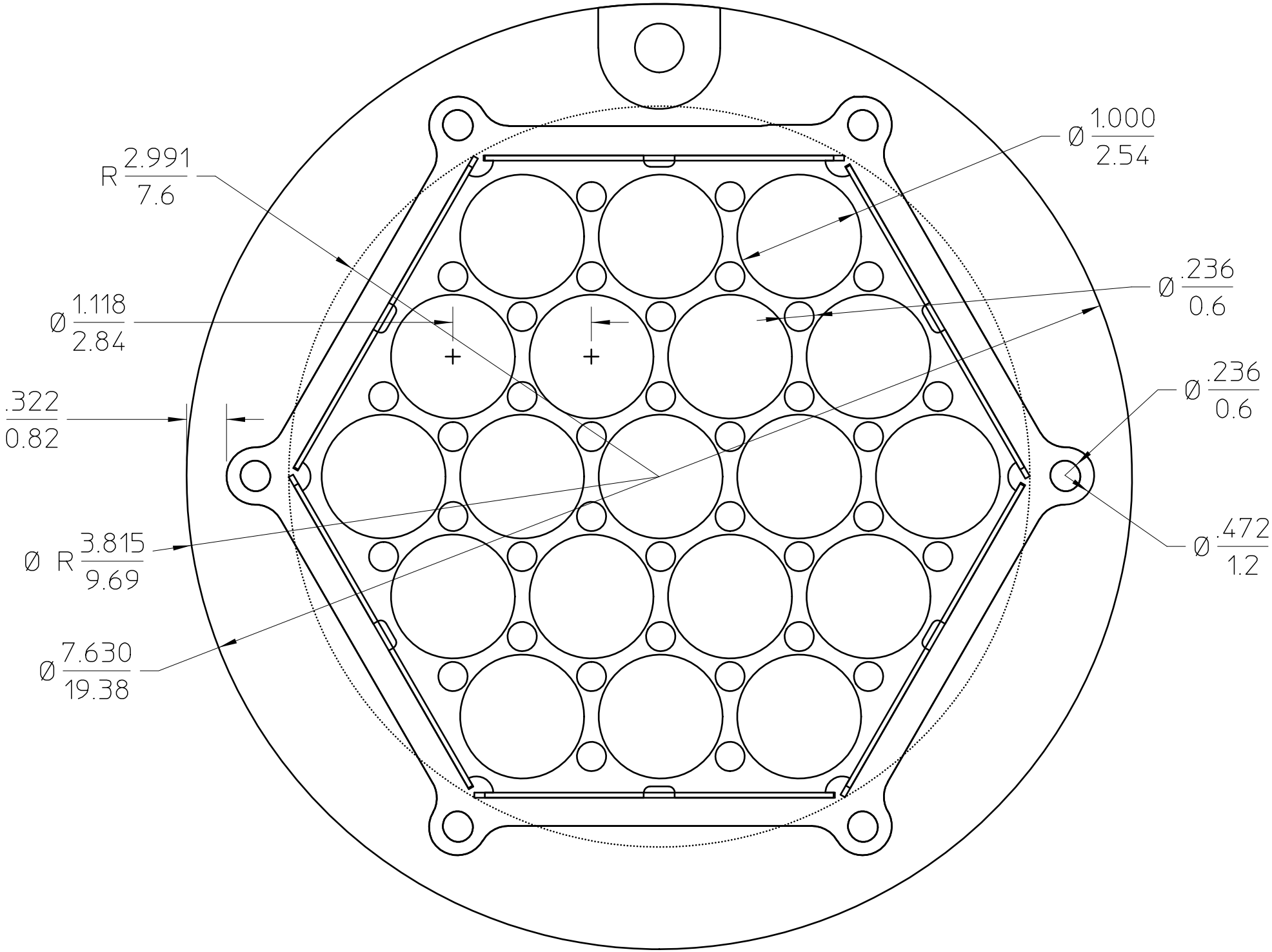
R 2.991 / 7.6
Ø 1.000 / 2.54
Ø 1.118 / 2.84
Ø .236 / 0.6
.322 / 0.82
Ø .236 / 0.6
Ø R 3.815 / 9.69
Ø .472 / 1.2
Ø 7.630 / 19.38