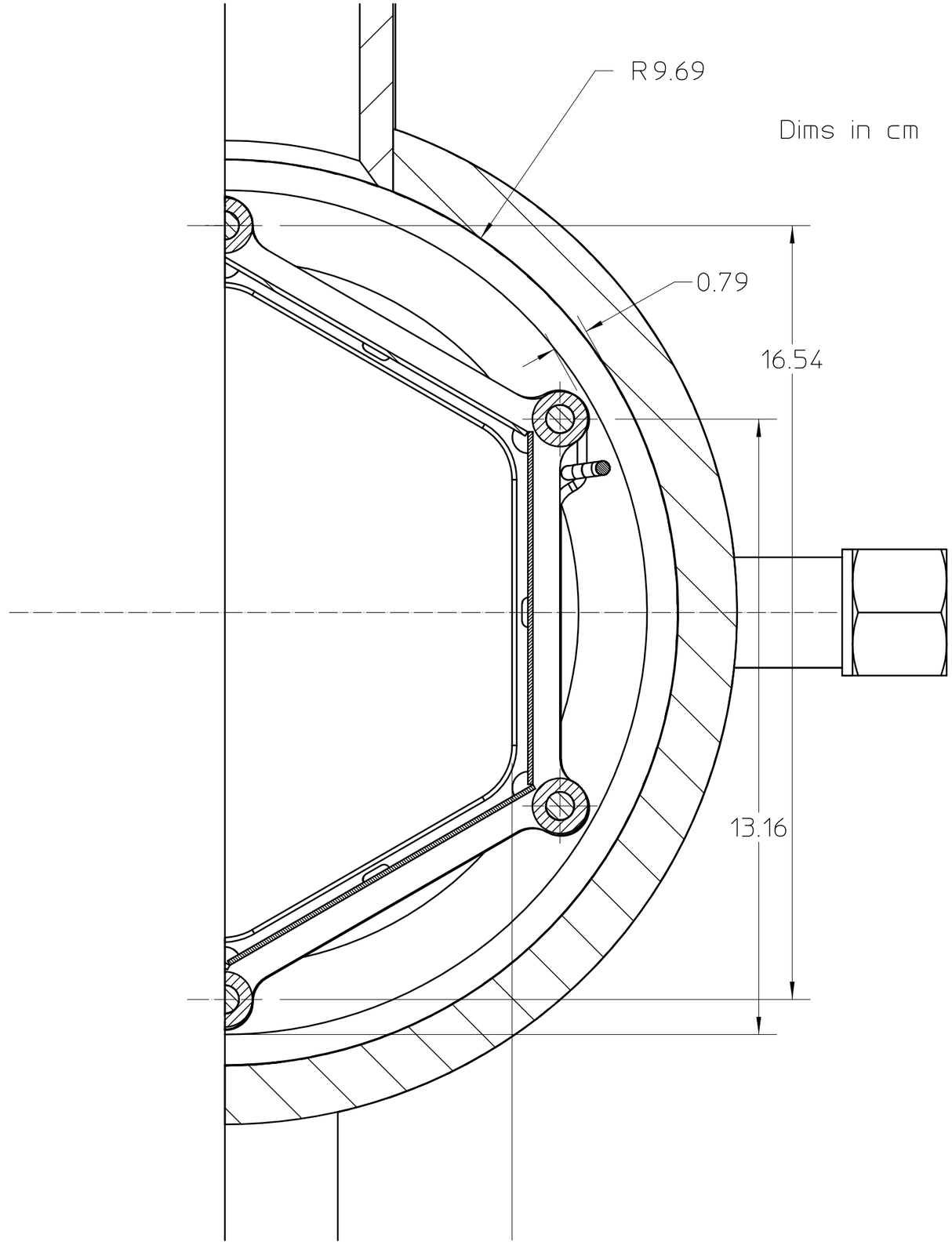
R9.69
Dims in cm
0.79
16.54
13.16