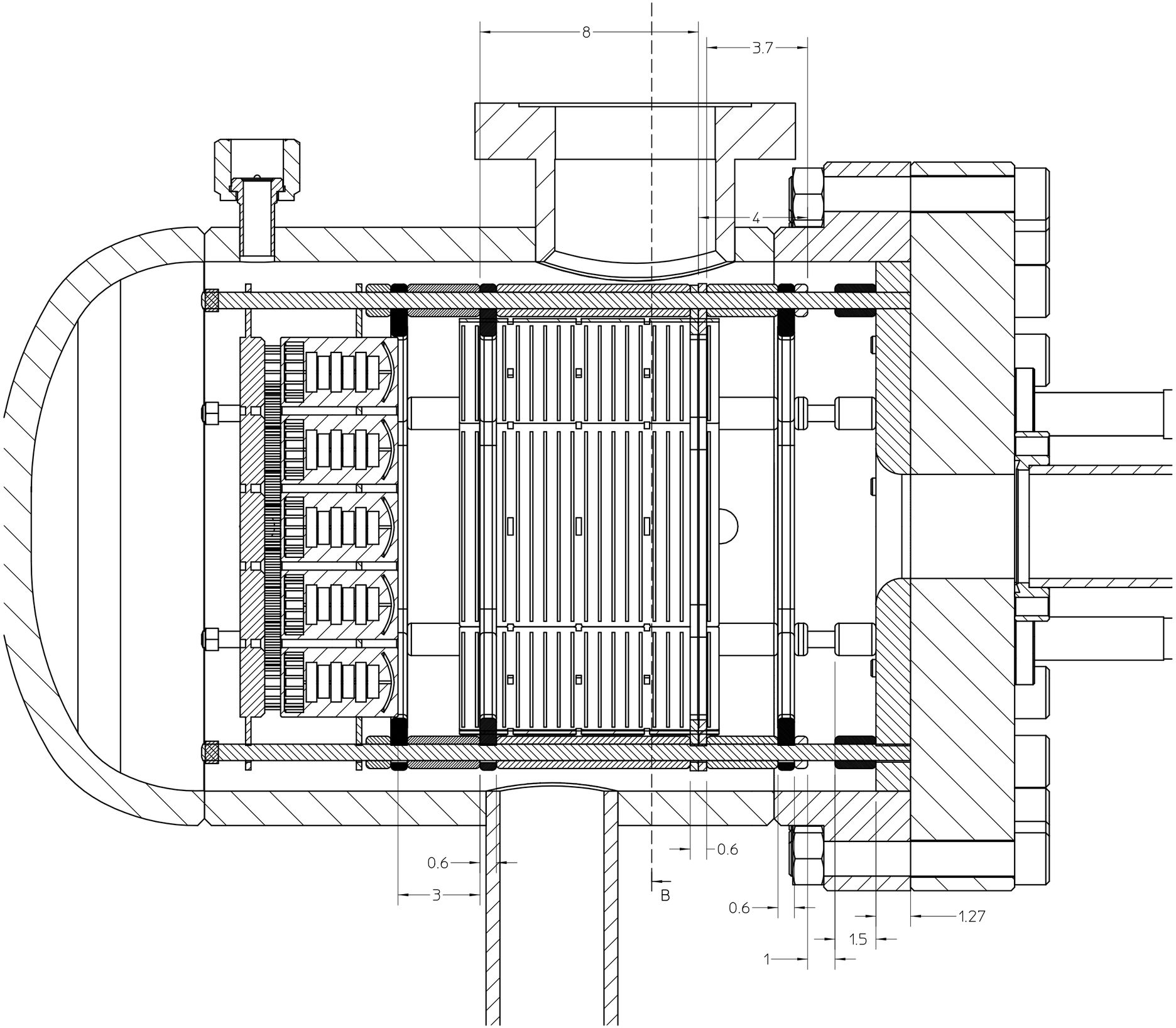
8
3.7
4
0.6
3
B
0.6
0.6
1.27
1.5
1