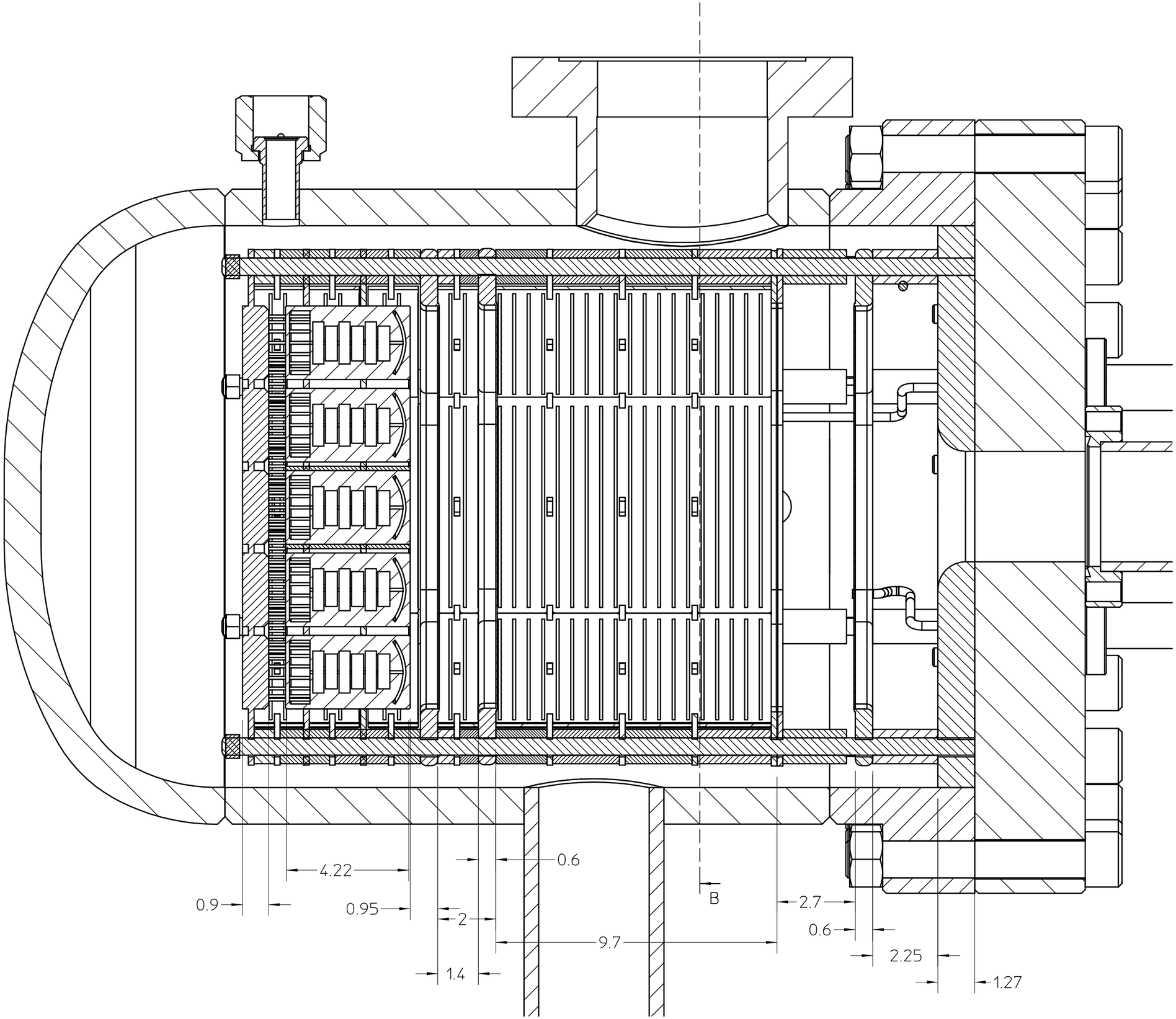
0.6
4.22
B
0.9
0.95
2.7
2
0.6
9.7
2.25
1.4
1.27